TC-K311

SERVICE MANUAL

AEP Model
UK Model
Australian Model

Model Name Using Similar Mechanism	TC-RX390
Tape Transport Machanism Type	TCM-190VB12CS

SPECIFICATIONS

Recording system	4-track 2-channel stereo
Fast winding time	Approx. 90 sec. (with Sony C-60 cassette)
Bias	AC bias
Heads	Erasing head × 1 (F&F head) Playback/Recording head × 1 (SD head)
Motors	Capstan motor × 1 (DC servo motor) Reel motor × 1 (DC motor)

Signal-to-noise ratio (at peak level and weighted)

Cassette (Dolby NR off)	Type IV	Type II	Type I
	58 dB	57 dB	55 dB

Measured at peak level weighted without NR. The S/N is improved by about 15 dB at 500 Hz and by about 20 dB at 1 kHz with Dolby-C NR on, and by about 5 dB at 1 kHz and by about 10 dB at 5 kHz with Dolby-B NR on.

Harmonic distortion	0.4% (with Type I, 160 nWb/m, 315 Hz, 3rd H.D.) 1.8% (with Type IV, 250 nWb/m, 315 Hz, 3rd H.D.)

Frequency response (Dolby NR off)

Type IV cassette	30 - 15,000 Hz (±3 dB, IEC) 30 - 13,000 Hz [±3 dB (-4 dB recording)]
Type II cassette	30 - 15,000 Hz (±3 dB, IEC)
Type I cassette	30 - 14,000 Hz (±3 dB, IEC)

Type IV : Sony METAL-S or ES-IV
Type II : Sony UX-S or UX
Type I : Sony HF-S

Wow and flutter	± 0.13% W.Peak (IEC) 0.07% W.RMS (NAB) ± 0.18% W.Peak (DIN)

Inputs

Line inputs (phone jacks)	Sensitivity	0.16 V
	Input impedance	47 k ohms

Outputs

Line outputs (phone jacks)	Rated output level	0.5 V at a load impedance of 47 k ohms
	Load impedance	Over 10 k ohms
Headphones (stereo phone jack)	Output level	1 mW at a load impedance of 32 ohms

General

Power requirements	AEP, Germany Model : 220 - 230 V AC, 50/60 Hz UK, Australian Model : 240 V AC, 50/60 Hz
Power consumption	23 W
Dimensions	Approx. 430 × 123 × 310 mm (w/h/d) ($17 \times 4\frac{7}{8} \times 12\frac{1}{4}$ inches) including projecting parts and controls
Mass	Approx. 3.8 kg (8 lbs 6 oz)

Supplied accessories Audio connecting cords (2)

Design and specifications are subject to change without notice.

Note

This appliance conforms with EEC Directive 87/308/EEC regarding interference suppression.

STEREO CASSETTE DECK

SONY®

TABLE OF CONTENTS

Section	Title	Page
specifications		1
1. GENERAL		
1-1.	Identifying the Parts	3
2. DISASSEMBLY		
2-1.	Front Panel	4
2-2.	Mechanism Deck	4
2-3.	Head	5
2-4.	Fitting Base Block	5
2-5.	Motor	5
3. EXPLANATION OF IC TERMINALS		6
4. ADJUSTMENTS		
4-1.	Mechanical Adjustments	8
4-2.	Electrical Adjustments	8
5. DIAGRAMS		
5-1.	Block Diagram	11
5-2.	Circuit Boards Location	14
5-3.	Printed Wiring Boards	15
5-4.	Schematic Diagram (SYSTEM CONTROL SECTION)	19
5-5.	Schematic Diagram (AUDIO SECTION)	24
6. EXPLODED VIEWS		
6-1.	Chassis Section	27
6-2.	Front Panel Section	28
6-3.	Mechanism Section 1	29
6-4.	Mechanism Section 2	30
7. ELECTRICAL PARTS LIST		31

MODEL IDENTIFICATION
(Specification Label)

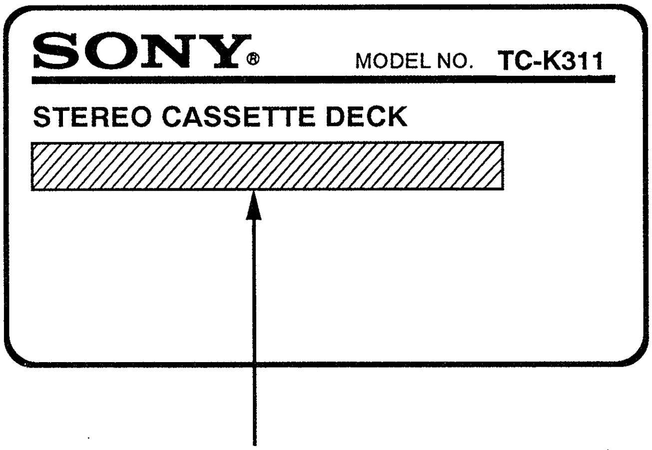

AEP, Germany model : AC 220-230V ~50/60Hz 23W
UK, Australian model : AC 240V~50/60Hz 23W

SAFETY-RELATED COMPONENT WARNING!!

COMPONENTS IDENTIFIED BY MARK ⚠ OR DOTTED LINE WITH MARK ⚠ ON THE SCHEMATIC DIAGRAMS AND IN THE PARTS LIST ARE CRITICAL TO SAFE OPERATION. REPLACE THESE COMPONENTS WITH SONY PARTS WHOSE PART NUMBERS APPEAR AS SHOWN IN THIS MANUAL OR IN SUPPLEMENTS PUBLISHED BY SONY.

SECTION 1
GENERAL

This section is extracted from instruction manual.

1-1. IDENTIFYING THE PARTS

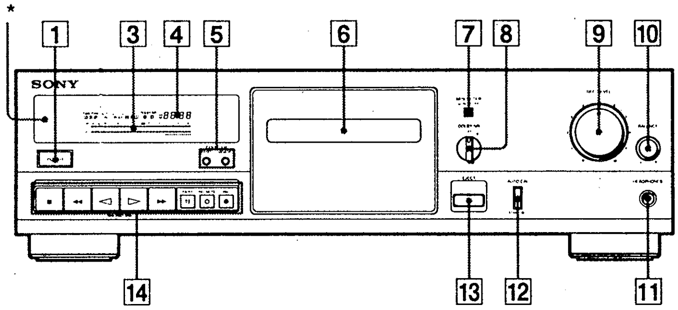

Front Panel

For details, refer to the page number(s) indicated in parentheses.

1 POWER switch
3 Peak level meter
4 Digital counter
5 COUNTER buttons
RESET button
MEMORY button
6 Cassette holder
7 MPX FILTER button
8 DOLBY NR (noise reduction) switch
9 REC (recording) LEVEL control
10 BALANCE control
11 HEADPHONES jack (stereo phone jack)
12 AUTO CAL button
13 ≜ (eject) button
14 Tape operation buttons
■ (stop) button
◀◀ (leftward fast winding) (Multi-AMS**) button
◀ (reverse play) button
▶ (forward play) button
▶▶ (rightward fast winding) (Multi-AMS**) button
II PAUSE button
O REC MUTE (record muting) button
● REC (recording) button

* Remote control sensor
You can remotely control this cassette deck with:
— A remote commander that came with a Sony amplifier or receiver if it has the R mark and cassette deck control capability.
— An optional Sony remote commander with the R mark and cassette deck control capability.

** AMS is an abbreviation for Automatic Music Sensor.

SECTION 2
DISASSEMBLY

Note : Follow the disassembly procedure in the numerical order given.

CASE
Unscrew the four case attachment screws M3 × 8 and remove the case.

2-1. FRONT PANEL

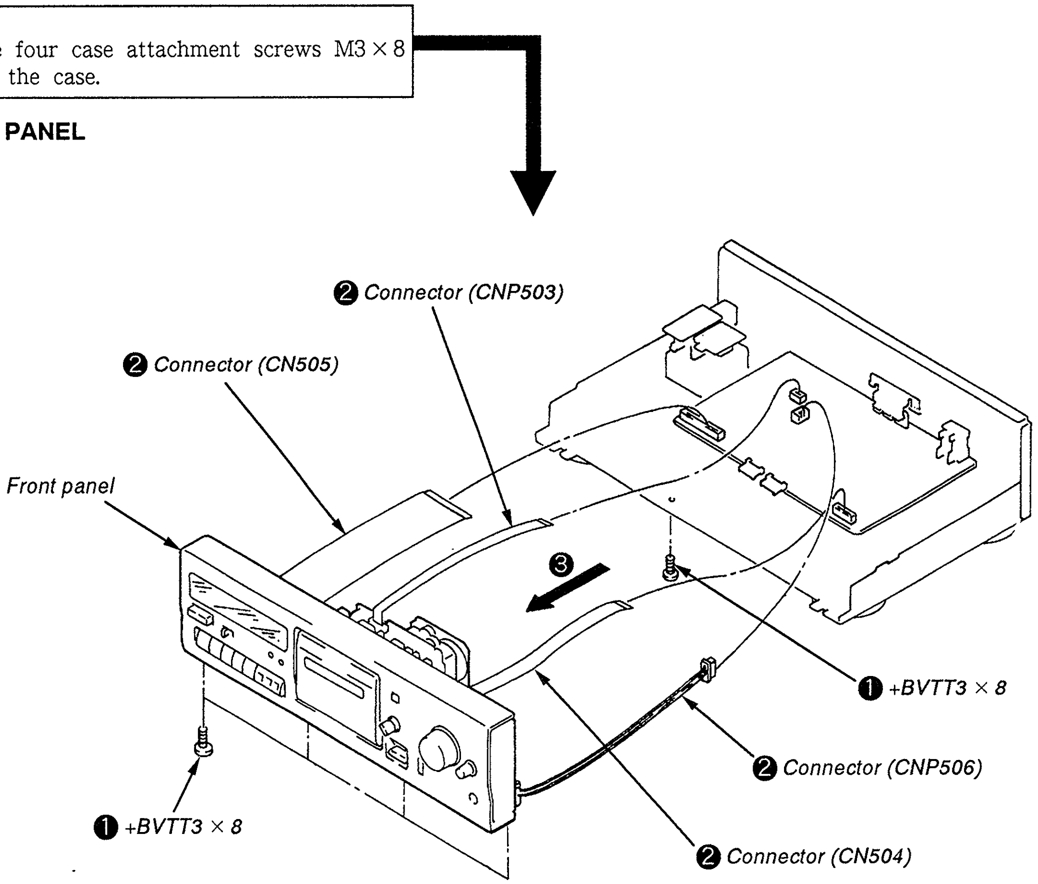

2-2 MECHANISM DECK

❶ *Press the eject button.*

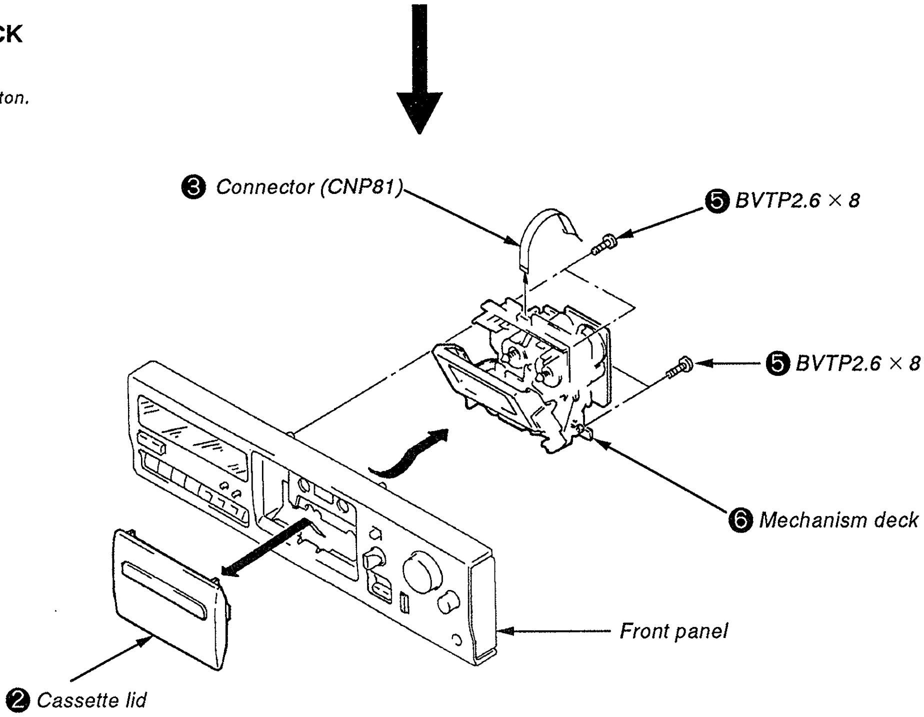

2-3. HEAD

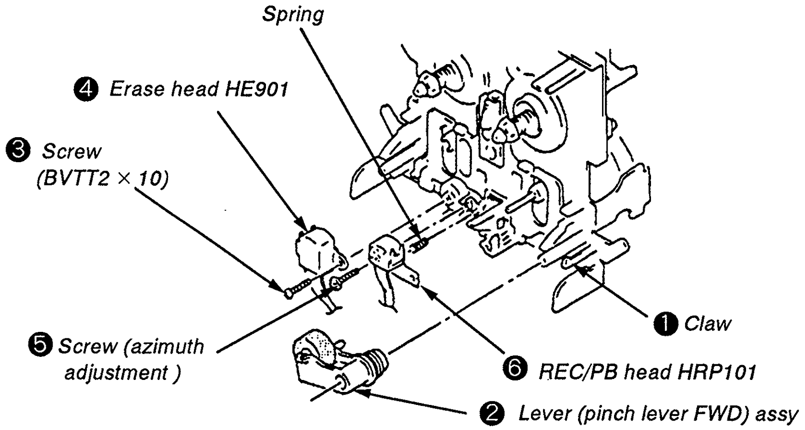

2-4. FITTING BASE BLOCK

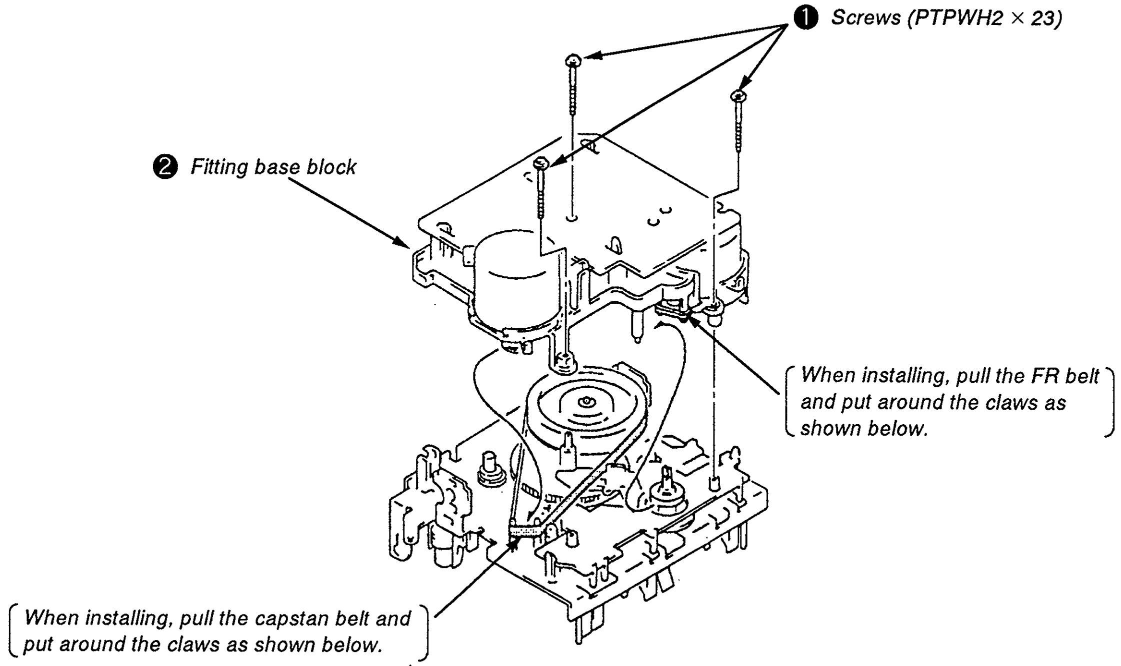

2-5. MOTOR

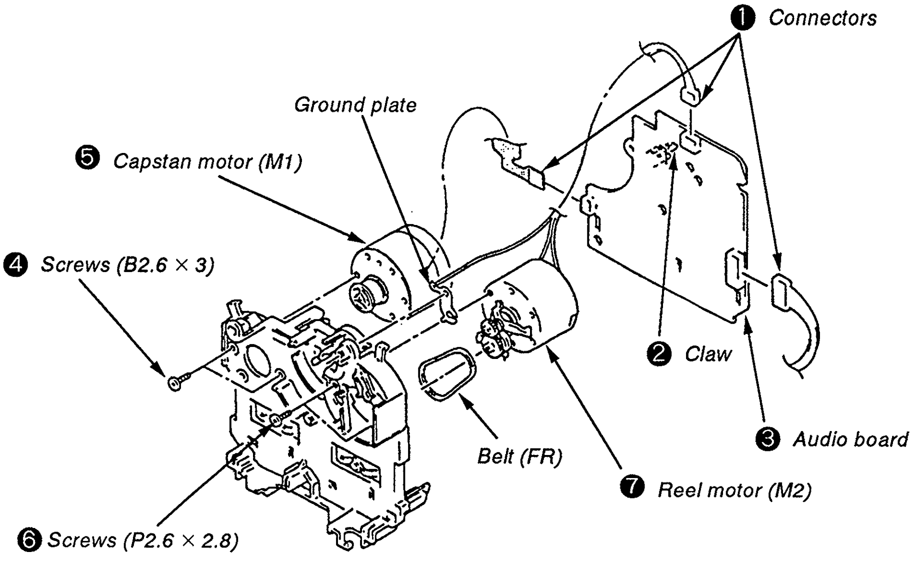

SECTION 3
EXPLANATION OF IC TERMINALS

IC801 CXP82316-014Q

Pin No.	Pin name	I/O	Description
1	STOP SW	I	Mechanism stop switch input terminal.
2	SIRCS	I	SIRCS signal in terminal.
3	NC	–	Not used.
4	———	–	
5	———	–	
6	MPX KEY	I	MPX Key ON/OFF switch input terminal. OFF = 0V
7	MPX ON/$\overline{\text{OFF}}$	O	MPX Filter ON/OFF control terminal. OFF = L
8	CAL ON/$\overline{\text{OFF}}$	O	Calibration ON/OFF control terminal.
9	REC CAL0	I	REC calibration terminal.
10	REC CAL1	I	REC calibration terminal.
11	GP CAL0	I	GP calibration terminal.
12	GP CAL1	I	GP calibration terminal.
13	———	–	
14	LINE MUTE	O	Line mute ON/OFF. 0V =Mute
15	$\overline{\text{REC}}$/PB	O	Recording/Playback selector for dolby IC select.
16	REC MUTE	O	REC out mute terminal.
17	REEL –	O	Reel motor – control terminal.
18	REEL +	O	Reel motor + control terminal.
19	BIAS	O	Bias ON/OFF.
20	$\overline{\text{RELAY}}$	O	Relay selector, terminal
21	CAL KEY	I	Calibration ON/OFF switch input terminal. ON = 0V
22	KEY X	I	Key switch input terminal.
23	KEY Y	I	Key switch input terminal.
24	METER L	I	Meter level Lch.
25	METER R	I	Meter level Rch.
26	DOLBY	I	Dolby OFF/B/C select terminal.
27	HALF	I	Half pawl input terminal.
28	AMS	I	AMS signal input terminal.
29	S • REEL	I	Suplly pulse input terminal.
30	RESET	I	Reset terminal. Reset = 0V
31	XO	O	System clock input terminal.
32	XI	I	System clock output terminal.
33	GND	–	Power supply (GND)
34	BIAS CAL0	O	Bias calibration terminal.
35	BIAS CAL1	O	Bias calibration terminal.
36	BIAS CAL2	O	Bias calibration terminal.
37	BIAS CAL3	O	Bias calibration terminal.
38	CAP • M ON/$\overline{\text{OFF}}$	O	Capstan motor. ON/OFF control.
39	NC	–	Not used.
40	OSC ON/$\overline{\text{OFF}}$	O	OSC ON/OFF control.

Pin No.	Pin name	I/O	Description
41	OSC H/$\overline{L}$	O	OSC H/L control.
42	NC	–	Not used.
43	NC	–	Not used.
44	NC	–	Not used.
45	NC	–	Not used.
46	S1	O	FL Segment.
47	S2	O	FL Segment.
48	S3	O	FL Segment.
49	S4	O	FL Segment.
50	S5	O	FL Segment.
51	S6	O	FL Segment.
52	S7	O	FL Segment.
53	S8	O	FL Segment.
54	S9	O	FL Segment.
55	S10	O	FL Segment.
56	S11	O	FL Segment.
57	S12	O	FL Segment.
58	S13	O	FL Segment.
59	S14	O	FL Segment.
60	S15	O	FL Segment.
61	S16	O	FL Segment.
62	S18	O	FL Segment.
63	NC	–	Not used.
64	NC	–	Not used.
65	NC	–	Not used.
66	G5	O	FL Grid.
67	G4	O	FL Grid.
68	G3	O	FL Grid.
69	G2	O	FL Grid.
70	G1	O	FL Grid.
71	– 20V	–	– 20V.
72	+5V	–	Power supply (+5V)
73	+5V	–	Power supply (+5V)
74	METAL	I	Metal tape selector terminal. "H" : Metal
75	CrO_2	I	CrO_2 tape select terminal. "H" : CrO_2
76	POWER IN	I	0V = Power OFF
77	POWER OUT	O	Power ON/OFF. ON = 0V
78	NC	–	Not used.
79	TEST	I	Test mode selector. 5V =Normal, 0V = Test mode
80	VER	I	Version selector. "H" : Reverse "L" : 1 way

SECTION 4
ADJUSTMENT

4-1. MECHANICAL ADJUSTMENTS

PRECAUTION

1. Clean the following parts with a denatured alcohol-moistened swab:
   - record/playback/erase head
   - pinch roller
   - rubber belts
   - capstan
   - idlers
2. Demagnetize the record/playback head with a head demagnetizer. (Head demagnetizer do not approach for the erase head.)
3. Do not use a magnetized screwdriver for the adjustment.
4. After the adjustments, apply suitable locking compound to the parts adjusted.
5. The adjustments should be performed with the rated power supply voltage unless otherwise noted.

Torque Measurement

Torque	Torque	Meter reading
Forward	CQ-102C	30 to 65g•cm (0.42 to 0.9 oz•inch)
Forward back tension	CQ-102C	1 to 6g•cm (0.014 to 0.08 oz•inch)
FF/REW	CQ-201B	70 to 120g•cm (0.98 to 1.67 oz•inch)

4-2. ELECTRICAL ADJUSTMENTS

PRECAUTION

1. The adjustment should be performed in the publication. (Be sure to male playback adjustment at first.)
2. The adjustments and measurement should be performed for both L-CH and R-CH.
   - Switch position
     DOLBY NR switch : OFF
   - Standard record position:
     Deliver the standard input signal level to input jack and set the REC LEVEL control to obtain the standard output signal level as follows.

– Record Mode –

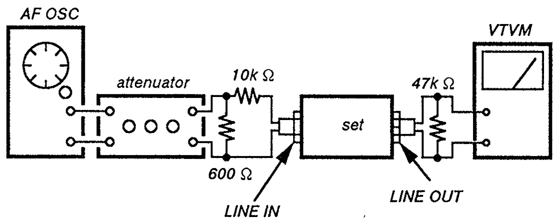

Standard Input Level

Input terminal	LINE IN
source impedance	10k Ω
input signal level	0.5V (– 3.8dB)

Standard Output Level

Output terminal	LINE OUT
load impedance	47k Ω
output signal level	0.5V (– 3.8dB)

Test Tape

Tape	Contents	Use
P-4-A100	10kHz, – 10dB	Azimuth Adjustment
P-4-L300	315Hz, 0dB	PB Level Adjustment
WS-48B	3kHz, 0dB	Tape Speed Adjustment

0dB=0.775V

Test Mode

1. Insert a short-circuit plug into TP801 (2P) and turn ON the power switch. (Earth pin ⑲ of IC801 and turn ON the power switch.)
   At first, all the fluorescent tubes light up, then the system returns to normal display. (However, "0000" is not displayed on the counter.)
2. To release the test mode, remove the short plug and turn off the power switch.
3. Remove the short plug after completion of adjustment.

Record/Playback Head Azimuth Adjustment

Procedure :

1. Forward playback Mode

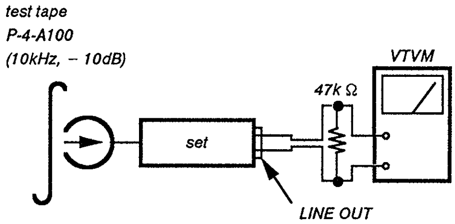

2. Turn the adjustment screw for the maximum output levels. If these levels do not match, turn the adjustment screw until both of output levels match together within 1dB.

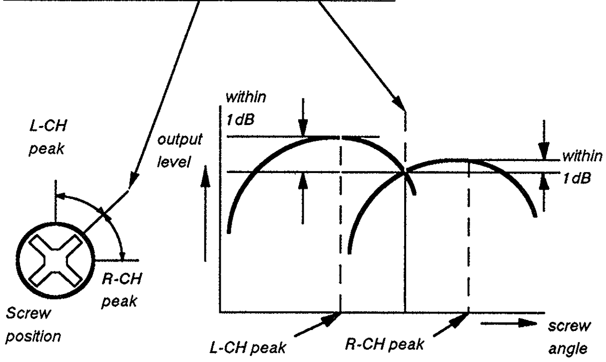

3. Playback Mode

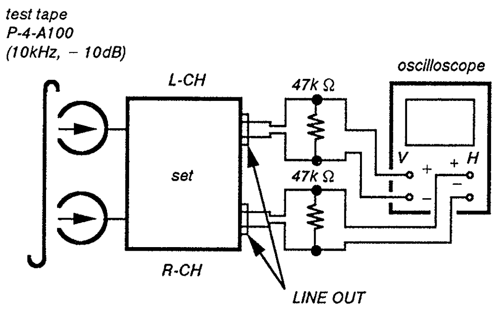

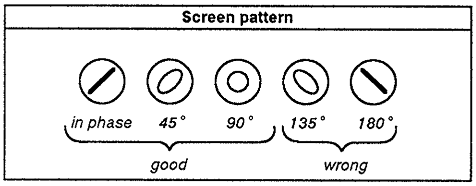

4. Change the reveres playback mode and repeat the steps 1 to 3.
5. After the adjustment, lock the adjustment screws with suitable locking compound.

Adjustment Location : − record/playback head −

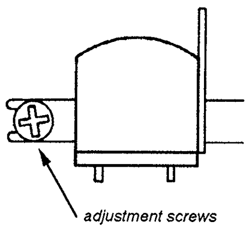

Tape Speed Adjustment

Procedure :

− Forward Playback Mode −

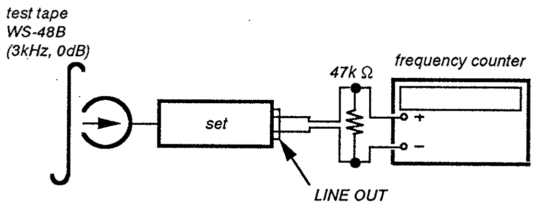

1. Set to FWD playback mode.
2. Adjust RV71 so that the frequency counter reading becomes 3,000 ± 10Hz.

Frequency difference between the beginning and the end of the tape should be within 3%.

Adjustment Location : AUDIO board

Playback Level Adjustment

Procedure :

− Forward Playback Mode −

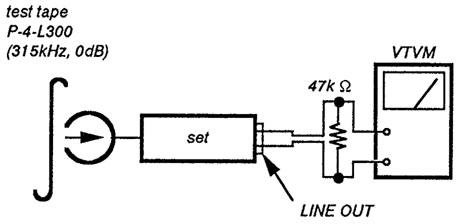

Adjust RV11(L-CH) and RV21(R-CH) so the VTVM reading becomes the adjustment limits below.

Adjustment Value :

LINE OUT level : − 7.7 ± 0.5dB (0.301 to 0.338V)

Level difference between channels : within 0.5dB

Confirm the LINE OUT level does not change in playback mode while changing the mode from playback to stop several times

Adjustment Location : AUDIO board

Bias Consumption Current Adjustment

This adjustment should be performed when replacing the head assy or the bias oscillating transformer (T81,T91).

Procedure :

( ) : R-CH

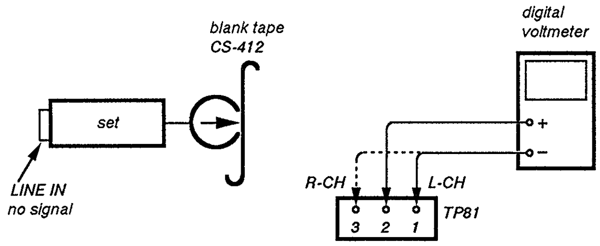

1. Connect the digital voltmeter to test point TP81.
2. Set RV81 (RV91) to mechanical center.
3. Set to FWD record mode.
4. Adjust T81 (T91) so that the digital voltmeter reading becomes minimum.

Adjustment Location : AUDIO board

Record Bias Adjustment

Setting :

REC LEVEL control : standard record position (Refer to page 8.)

Procedure :

1. Record Mode

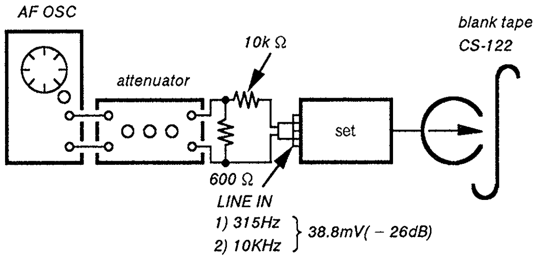

2. Playback Mode

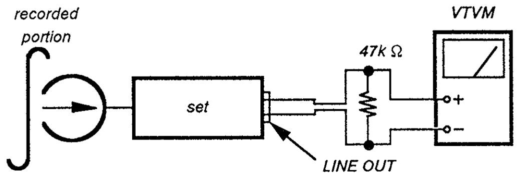

Confirm that the 10kHz playback output is 0 ± 0.5dB relative to the 315Hz output. If necessary, adjust RV81(L-CH), RV91(R-CH) and repeat the steps given above.

Adjustment Location : AUDIO board

Record Level Adjustment

Setting :

REC LEVEL control : standard record position (Refer to page 8.)

Procedure :

1. Record Mode

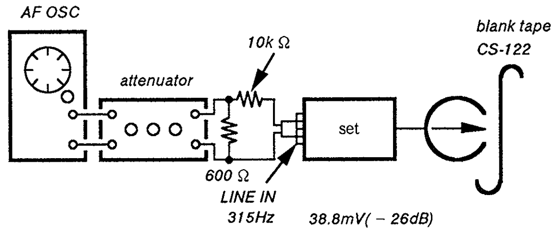

2. Playback Mode

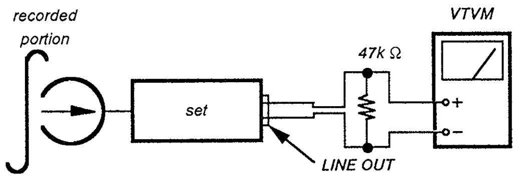

Confirm playback the tape recorded become adjustment level as follows.

If necessary, adjust RV111(L-CH), RV211(R-CH) and repeat the steps 1 and 2.

Adjustment Value :

LINE OUT level : – 26 ± 0.5dB (36.7 to 41.1mV)

Adjustment Location : SYSTEM CONTROL

– Adjustment Parts Location Diagrams –

[SYSTEM CONTROL BOARD]

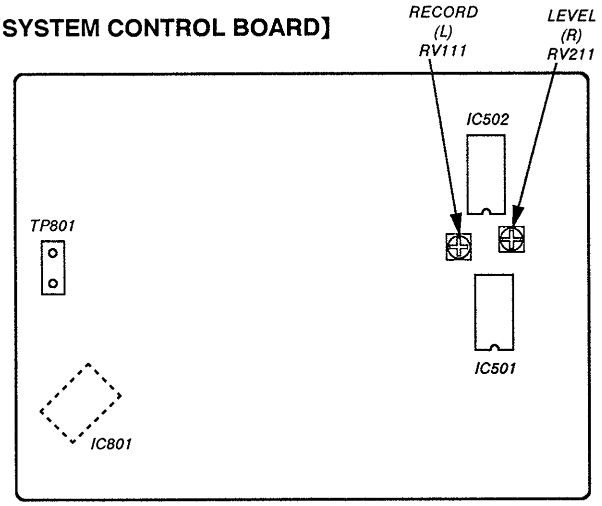

[AUDIO BOARD]

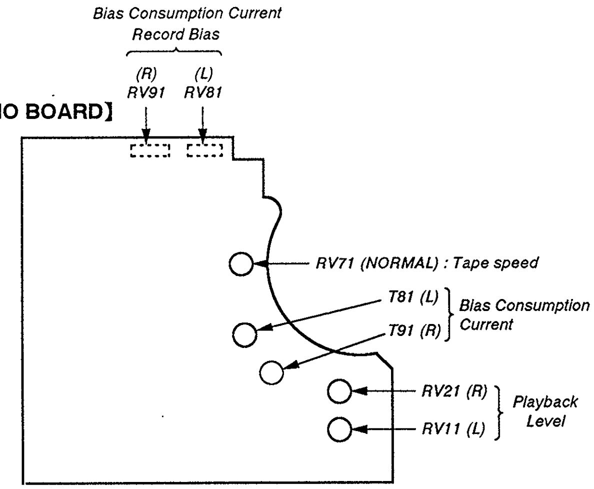

SECTION 5
DIAGRAMS

5-1. BLOCK DIAGRAM

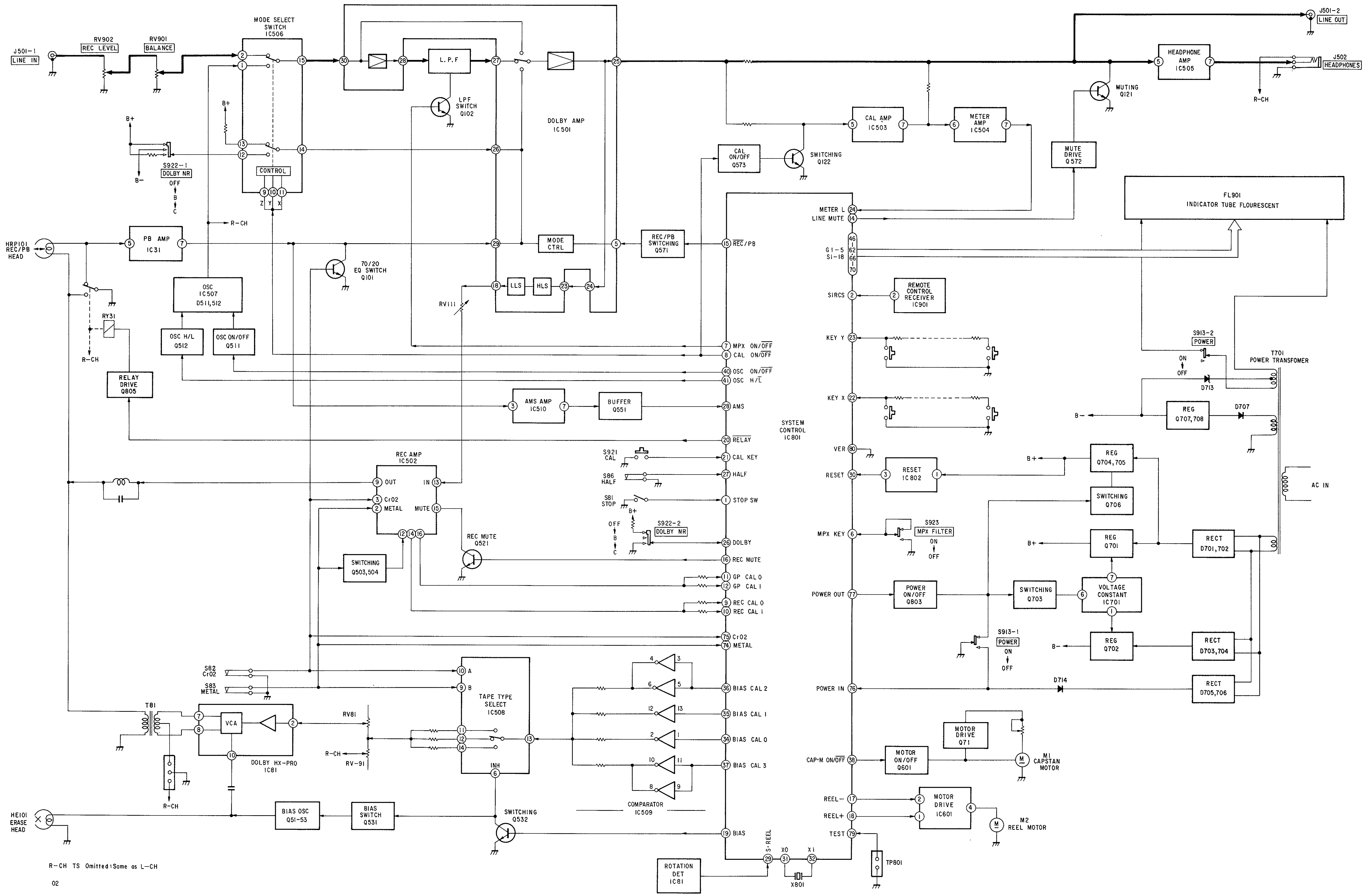

5-2. CIRCUIT BOARDS LOCATION

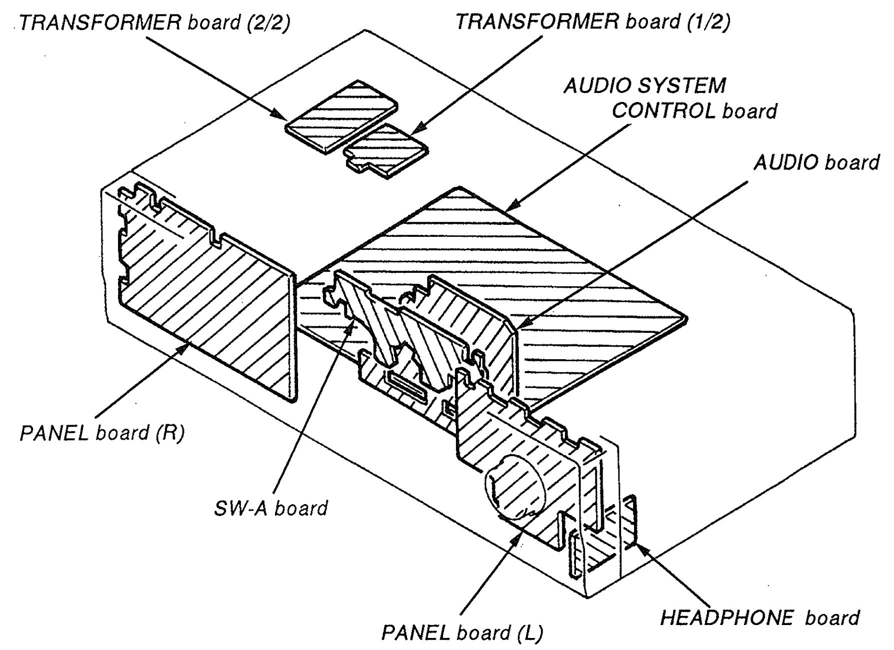

• Semiconductor Lead Layouts.

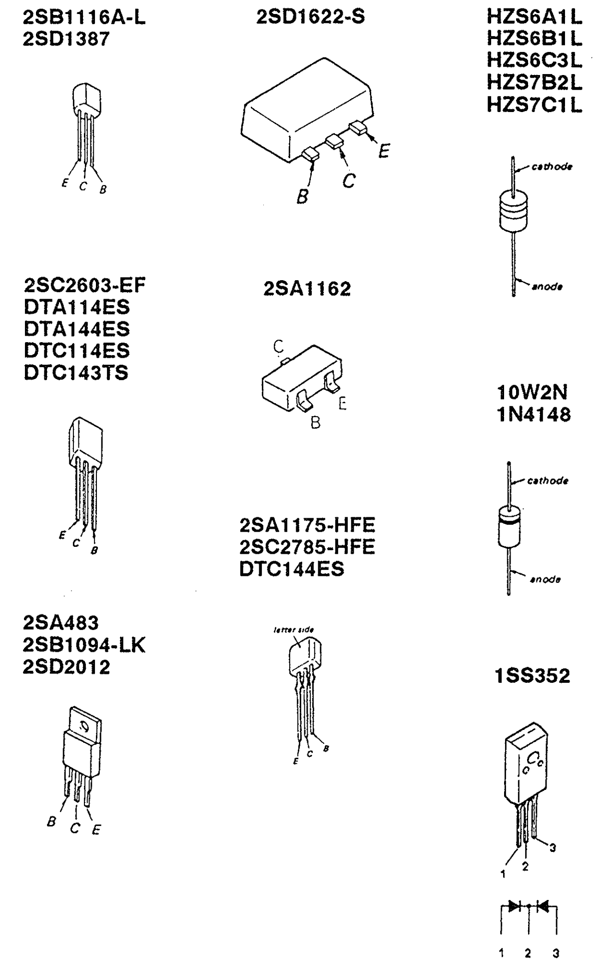

• SEMICONDUCTOR LOCATION

Ref. No.	Location	Ref. No.	Location
D31	H - 21	IC601	G - 15
D131	E - 13	IC701	B - 12
D132	F - 13	IC801	F - 16
D231	F - 13	IC802	E - 16
D232	F - 12	IC901	I - 2
D511	G - 11		
D512	G - 11	Q51	G - 21
D551	G - 13	Q52	G - 21
D571	D - 11	Q53	H - 21
D701	B - 15	Q71	H - 23
		Q101	H - 10
D702	B - 15		
D703	B - 15	Q102	F - 10
D704	B - 15	Q121	C - 8
D705	B - 15	Q122	E - 10
D706	C - 15	Q201	H - 10
		Q202	F - 8
D707	C - 16		
D708	B - 14	Q221	C - 8
D709	B - 12	Q222	E - 10
D710	B - 14	Q503	B - 10
D711	D - 15	Q504	B - 10
		Q511	G - 11
D712	C - 15		
D713	C - 16	Q512	G - 11
D714	D - 15	Q521	C - 10
D715	C - 13	Q531	G - 13
D801	E - 16	Q532	G - 13
		Q551	G - 13
D802	E - 16		
		Q571	D - 10
		Q572	D - 11
IC31	I - 21	Q573	E - 10
IC81	H - 22 (AUDIO)	Q601	G - 14
	H - 27 (SW-A)	Q701	A - 11
		Q702	A - 12
		Q703	B - 14
IC501	E - 9	Q704	A - 13
IC502	C - 9	Q705	B - 13
IC503	E - 11	Q706	B - 14
IC504	F - 13		
IC505	E - 13	Q707	C - 15
		Q708	C - 15
IC506	G - 9	Q803	G - 17
IC507	F - 11	Q805	D - 16
IC508	G - 14		
IC509	F - 14		
IC510	G - 12		

Note:

- O— : parts extracted from the component side.
- ■ : parts mounted on the conductor side.
- ● : Through hole.
- (dotted pattern) : Pattern on the side which is seen.
- (dotted pattern) : Pattern of the rear side.
- ▭ : Chip components extracted from the rear side.

5-3. PRINTED WIRING BOARDS

5-4. SCHEMATIC DIAGRAM (SYSTEM CONTRL SECTION)

• Refer to page 25 for IC Block Diagrams. • Refer to page 26 for Waveforms.

Note :

- All capacitors are in μ F unless otherwise noted. pF: μ μ F 50WV or less are not indicated except for electrolytics and tantalums.
- All resistors are in Ω and ¼W or less unless otherwise specified.
- % : indicates tolerance.
- △ : internal component.
- (symbol) : fusible resistor.

Note : The components identified by mark ⚠ or dotted line with mark ⚠ are critical for safety. Replace only with part number specified.

- (solid line) : B+ Line
- (dashed line) : B − Line
- (box) : adjustment for repair.
- Voltage and waveforms are dc with respect to ground under no-signal conditions.
  no mark : STOP
  ( ) : REC
- Voltages are taken with a VOM (Input impedance 10M Ω) Voltage variations may be noted due to normal production tolerances.
- Waveforms are taken with a oscilloscope. Voltage variations may be noted due to normal production tolerances.
- Circled numbers refer to waveforms.
- Signal path.
  (arrow) : PB
  (arrow) : REC
  (arrow) : LINE

Note :

- All capacitors are in μ F unless otherwise noted. pF: μ μ F 50WV or less are not indicated except for electrolytics and tantalums.
- All resistors are in Ω and ¼W or less unless otherwise specified.
- % : indicates tolerance.
- △ : internal component.
- —ᴡᴡ— : fusible resistor.

Note : The components identified by mark ⚠ or dotted line with mark ⚠ are critical for safety. Replace only with part number specified.

- ▬▬▬ : B+ Line
- ▬ ▬ ▬ : B – Line
- [ ] : adjustment for repair.
- Voltage and waveforms are dc with respect to ground under no-signal conditions.
  no mark : STOP
  ( ) : REC
- Voltages are taken with a VOM (Input impedance 10M Ω). Voltage variations may be noted due to normal production tolerances.
- Waveforms are taken with a oscilloscope. Voltage variations may be noted due to normal production tolerances.
- Circled numbers refer to waveforms.
- Signal path.
  ⊳ : PB
  ⊳⊳ : REC

• IC Block Diagrams

IC502 CXA1578P

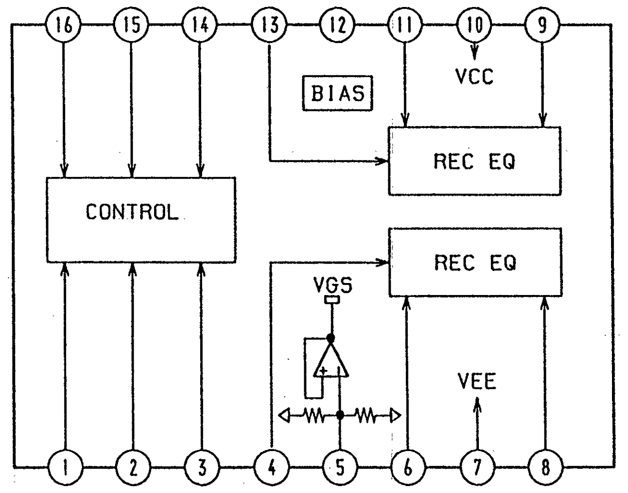

• WAVEFORMS

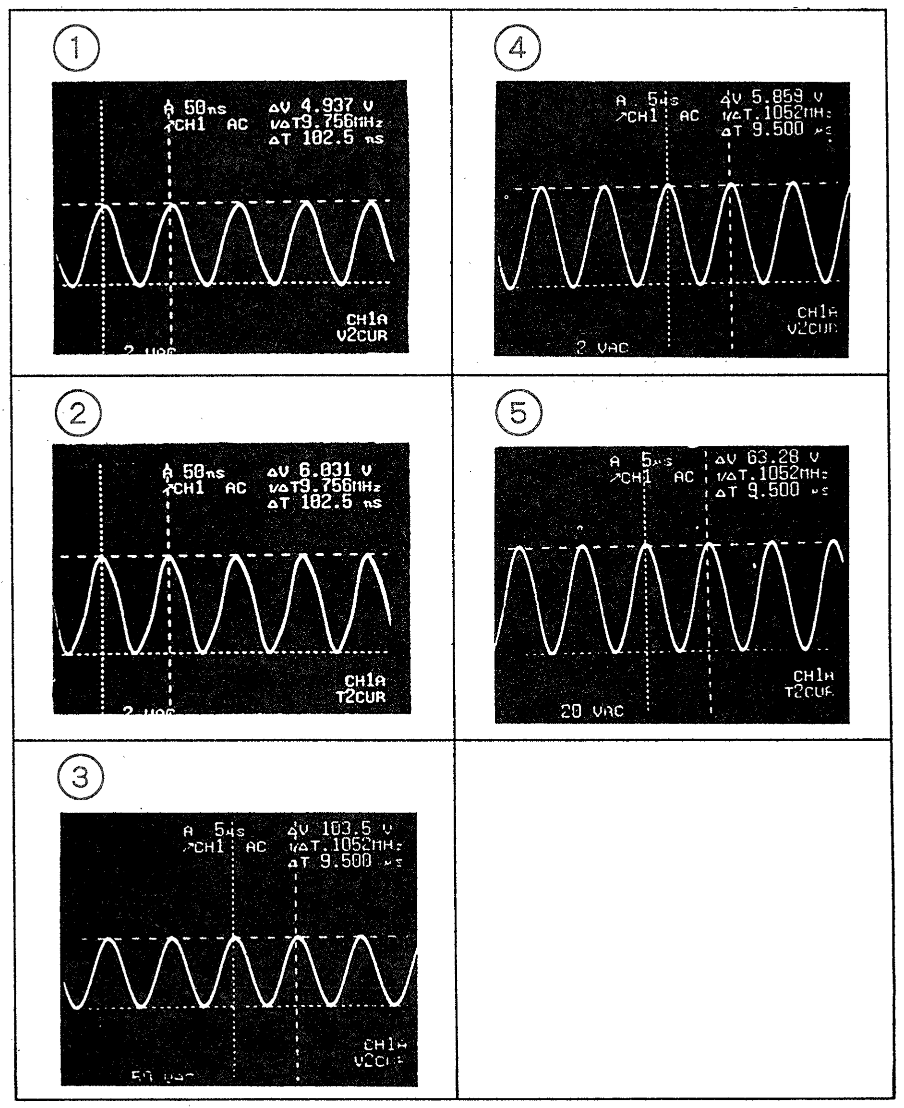

5-5. SCHEMATIC DIAGRAM (AUDIO SECTION)

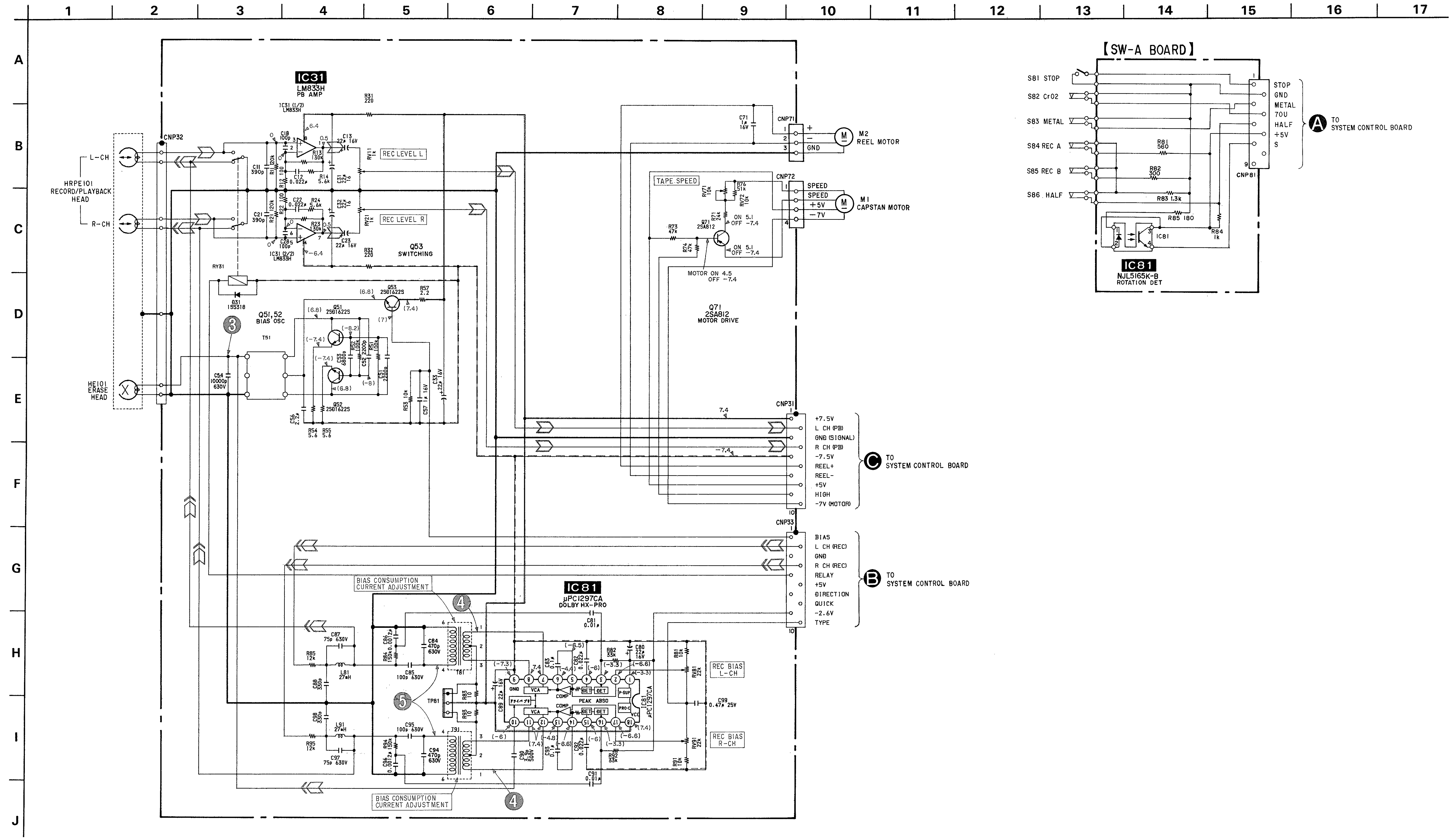

SECTION 6
EXPLODED VIEWS

NOTE :

- -XX, -X mean standardized parts, so they may have some difference from the original one.
- The construction parts of an assembled part are indicated with a collation number in the remark column.
- Color indication of Appearance Parts
  Example :
  KNOB, BALANCE (WHITE)....(RED)
  ↑ Parts color ↑ Cabinet's color
- Items marked " * "are not stocked since they are seldom required for routine service. Some delay should be anticipated when ordering these items.
- The mechanical parts with no reference number in the exploded views are not supplied.
- Hardware (# mark)list is given in the last of this parts list.

The components identified by mark ⚠ or dotted line with mark ⚠ are critical for safety.
Replace only with part number specified.

6-1. CHASSIS SECTION

●A : TRANSFORMER board (1/2)
●B : TRANSFORMER board (2/2)

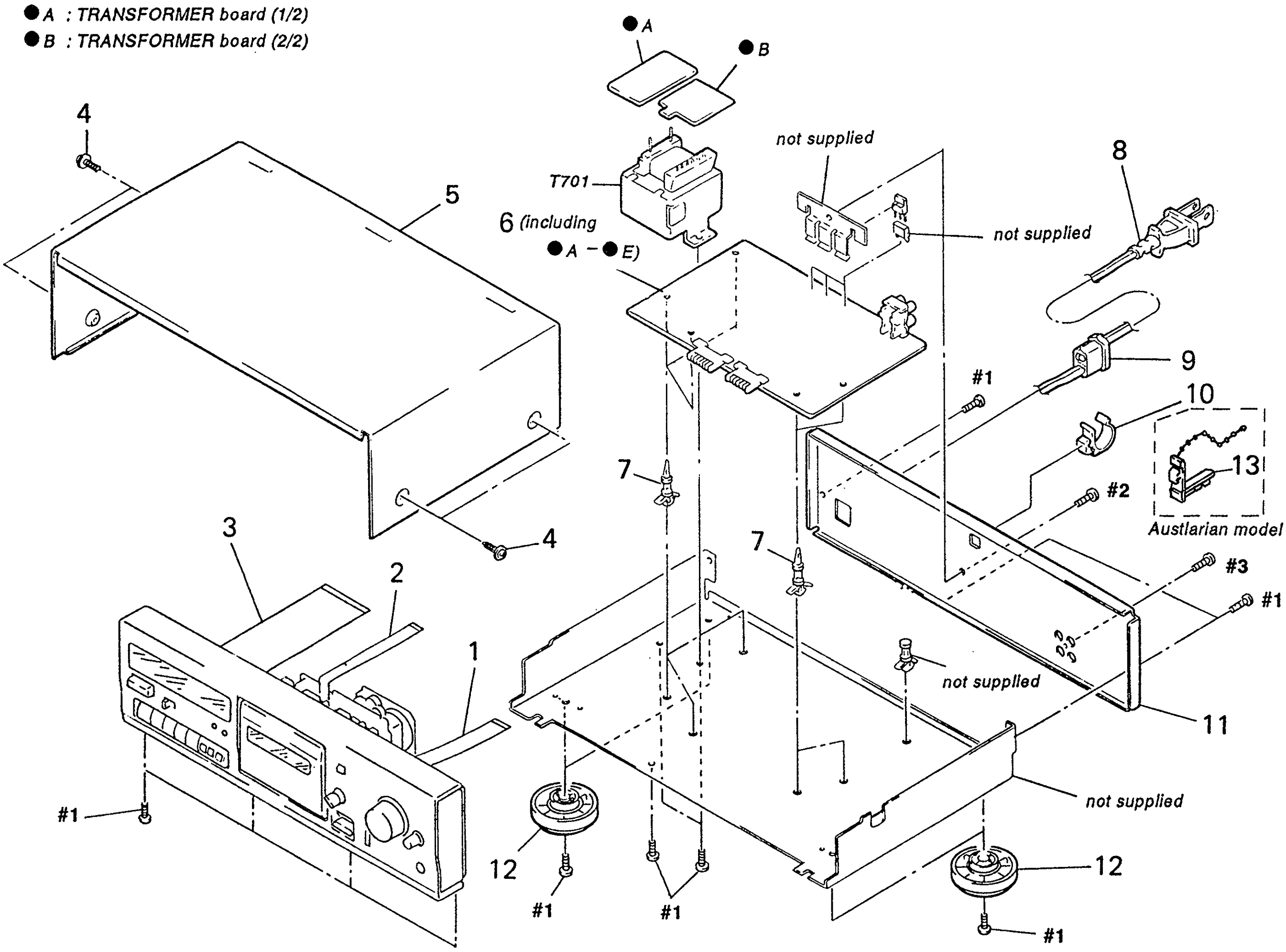

Ref. No.	Part No.	Description	Remark
1	1-751-099-11	WIRE (FLAT TYPE) (13 CORE)	
2	1-575-781-11	WIRE, FLAT TYPE (9 CORE)	
3	1-751-100-11	WIRE (FLAT TYPE) (33 CORE)	
4	3-704-366-01	SCREW (CASE) (M3X8)	
5	3-332-578-61	CASE	
* 6	A-2007-011-A	SYSTEM CONTROL BOARD, COMPLETE (AEP, Germany)	
* 6	A-2007-054-A	SYSTEM CONTROL BOARD, COMPLETE (UK, AUS)	
* 7	3-346-265-11	HOLDER, PC BOARD	
⚠8	1-575-651-21	CORD, POWER (AEP, Germany)	
⚠8	1-696-586-11	CORD, POWER (UK)	
⚠8	1-696-845-11	CORD, POWER (AUS)	
* 9	3-703-244-00	BUSHING (2104), CORD	
* 10	4-949-235-01	HOOK (AEP, Germany)	
* 11	3-387-836-01	PANEL, BACK (UK, AUS)	
* 11	3-387-836-11	PANEL, BACK (AEP, Germany)	
12	4-956-885-11	FOOT (F58175S2W)	
13	4-956-370-02	BAND, PLUG FIXED (UK, AUS)	
⚠T701	1-423-634-11	TRANSFORMER, POWER	

6-2. FRONT PANEL SECTION

● C : PANEL board (R)
● D : PANEL board (L)
● E : HEADPHONE board

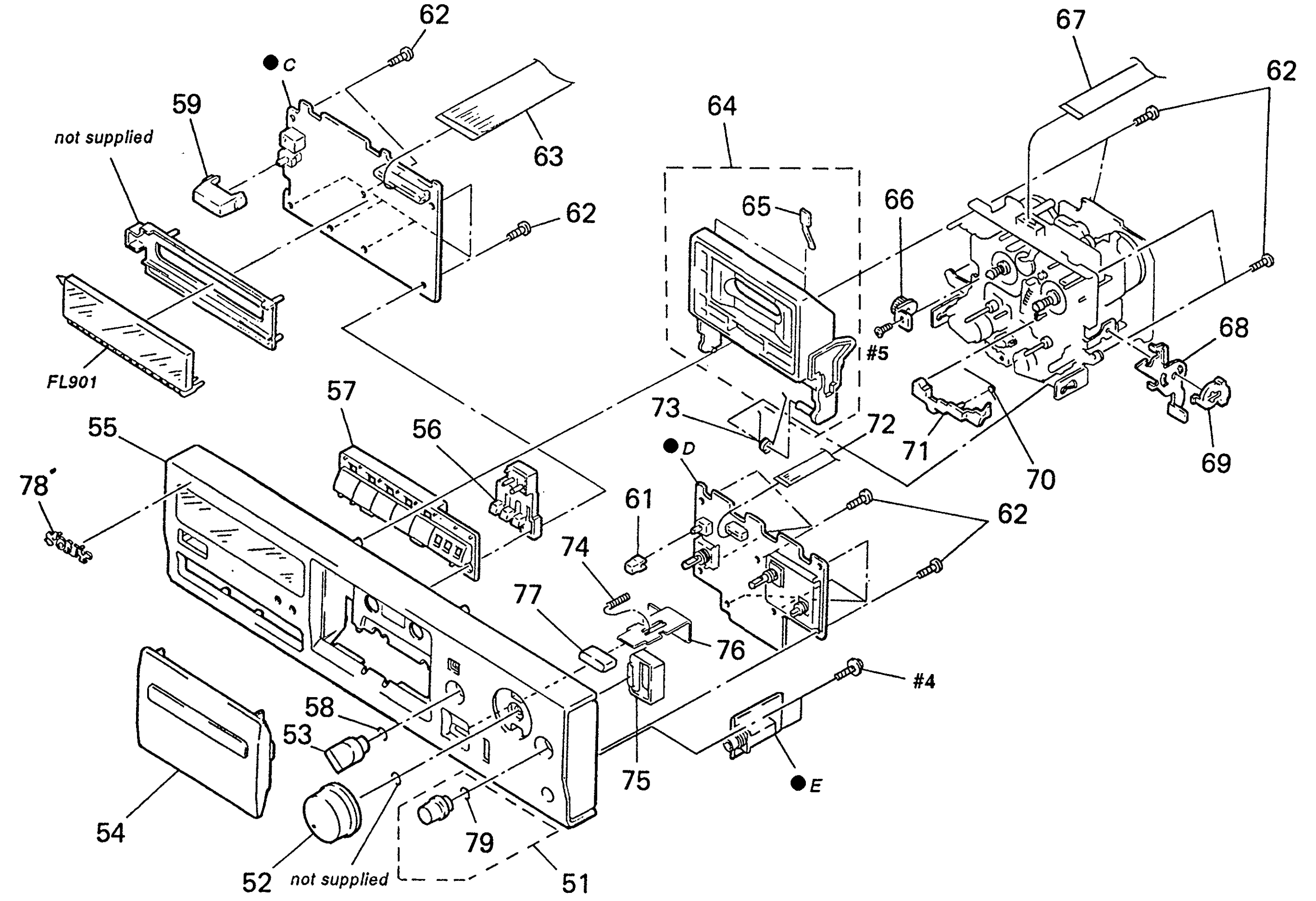

Ref. No.	Part No.	Description	Remark
51	A-2004-274-A	KNOB (RB) ASSY	
52	3-367-438-11	KNOB (REC)	
53	4-908-097-21	KNOB	
54	X-3366-523-1	LID ASSY, CASSETTE	
55	X-3366-524-1	PANEL ASSY, FRONT	
56	3-386-248-01	BUTTON (RE)	
57	3-386-247-01	BUTTON (FW)	
58	3-350-440-01	SPRING	
59	3-354-932-01	BUTTON (POWER)	
61	3-380-952-01	BUTTON	
62	4-951-620-01	SCREW (2.6X8), +BVTP	
63	1-751-100-11	WIRE (FLAT TYPE) (33 CORE)	
64	X-3340-195-1	HOLDER (R) ASSY, CASSETTE	
65	3-308-823-11	SPRING	

Ref. No.	Part No.	Description	Remark
66	3-354-963-01	DAMPER	
67	1-575-781-11	WIRE, FLAT TYPE (9 CORE)	
* 68	3-354-954-01	LEVER (LOCK LEVER R)	
69	3-354-957-01	JOINT (LOCK LEVER)	
70	3-354-962-01	SPRING (EJ SAFTY SPRING R)	
71	3-354-956-01	LEVER (EJ SAFTY LEVER R)	
72	1-751-099-11	WIRE (FLAT TYPE) (13 CORE)	
73	3-354-960-01	SPRING (LOADING R), TORSION	
74	3-359-906-01	SPRING, COMPRESSION	
75	3-387-834-11	BUTTON (MBC)	
76	3-387-833-01	SLIDER (EJECT)	
77	3-387-830-01	BUTTON (EJECT)	
78	4-925-334-11	EMBLEM (5-A), SONY	
79	3-354-981-01	SPRING (SUS), RING	

6-3. MECHANISM SECTION 1
(TCM-190VB12CS)

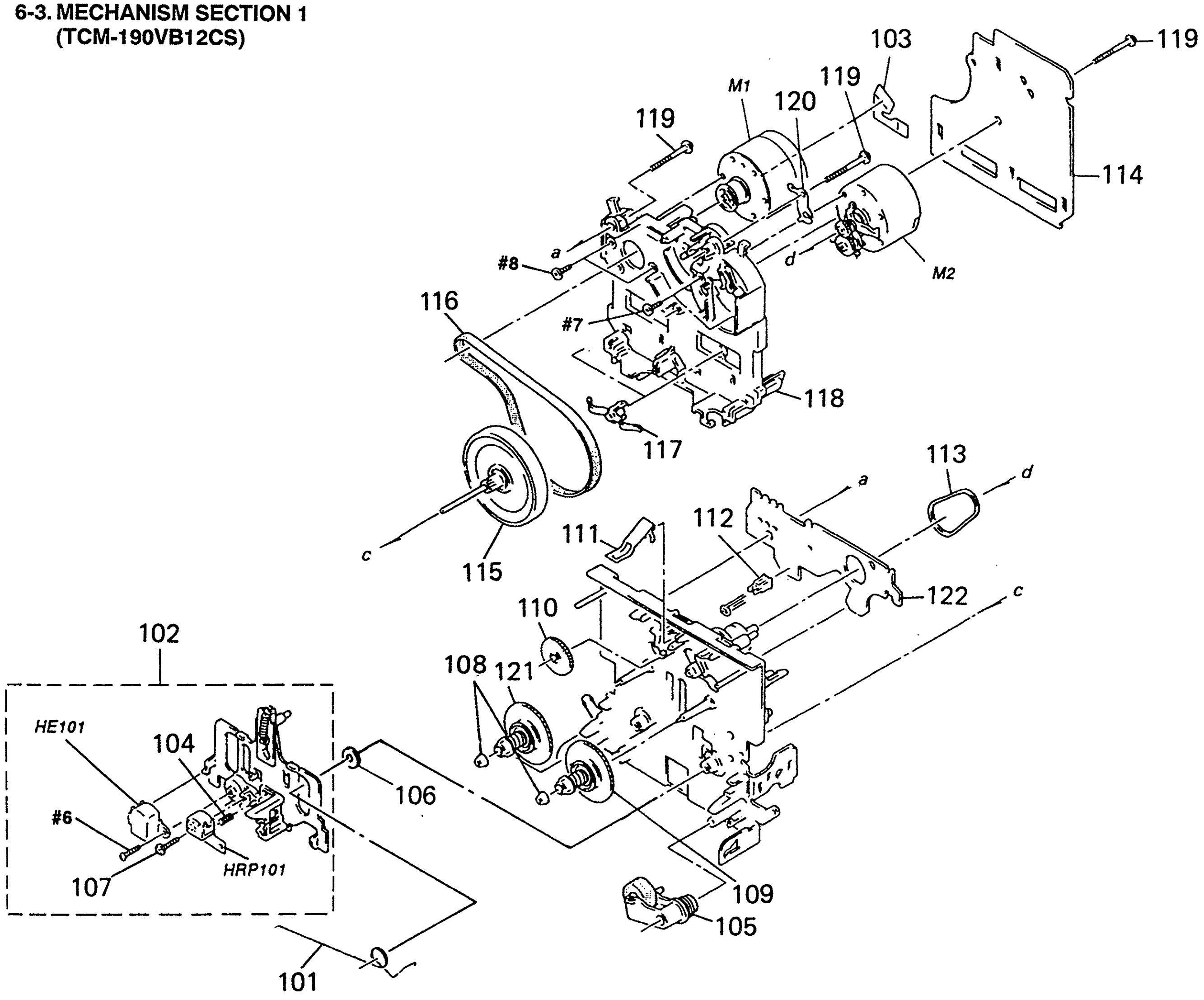

Note: The components identified by mark ⚠ or dotted line with mark ⚠ are critical for safety.
Replace only with part number specified.

Ref. No.	Part No.	Description	Remark
101	3-359-455-01	SPRING, TORSION	
102	A-2004-093-A	BASE (ONE) ASSY, HEAD	
103	1-638-983-11	PC BOARD, MOTOR FLEXIBLE	
104	3-343-484-01	SPRING, COMPRESSION	
105	X-3359-408-1	LEVER (PINCH LEVER FWD) ASSY	
106	3-356-713-01	WASHER	
107	3-359-446-01	SCREW (AZIMUTH ADJUSTMENT)	
108	3-362-308-01	CAP (REEL)	
109	X-3359-404-1	TABLE ASSY, REEL	
110	3-359-424-01	GEAR (REV GEAR)	
111	3-359-430-01	SPRING(CASSETTE RETAINER), LEAF	
112	3-343-419-01	HOLDER (S SENSER A)	
113	3-359-466-01	BELT (FR), SQUARE	
* 114	A-2006-756-A	AUDIO BOARD, COMPLETE	
115	X-3359-406-1	FLYWHEEL (FWD) ASSY	
116	3-359-467-01	BELT (1 WAY FLAT BELT)	
117	3-575-321-00	RETAINER, THRUST, CAPSTAN	
* 118	3-359-436-01	BASE (THRUST RETAINER), FITTING	
119	3-359-414-01	SCREW (+PTPWH 2X23)	
120	3-359-450-01	PLATE, GROUND	
121	X-3362-078-1	TABLE ASSY (B), REEL	
* 122	1-634-841-14	SW-A BOARD	
⚠HE101	1-543-673-11	HEAD, MAGNETIC (ERASE)	
* HRP101	1-543-919-11	HEAD, MAGNETIC(RECORD/PLAYBACK)	
M1	X-3365-377-1	MOTOR ASSY, CAPSTAN	
M2	X-3363-501-1	MOTOR ASSY, REEL	

6-4. MECHANISM SECTION 2
(TCM-190VB12CS)

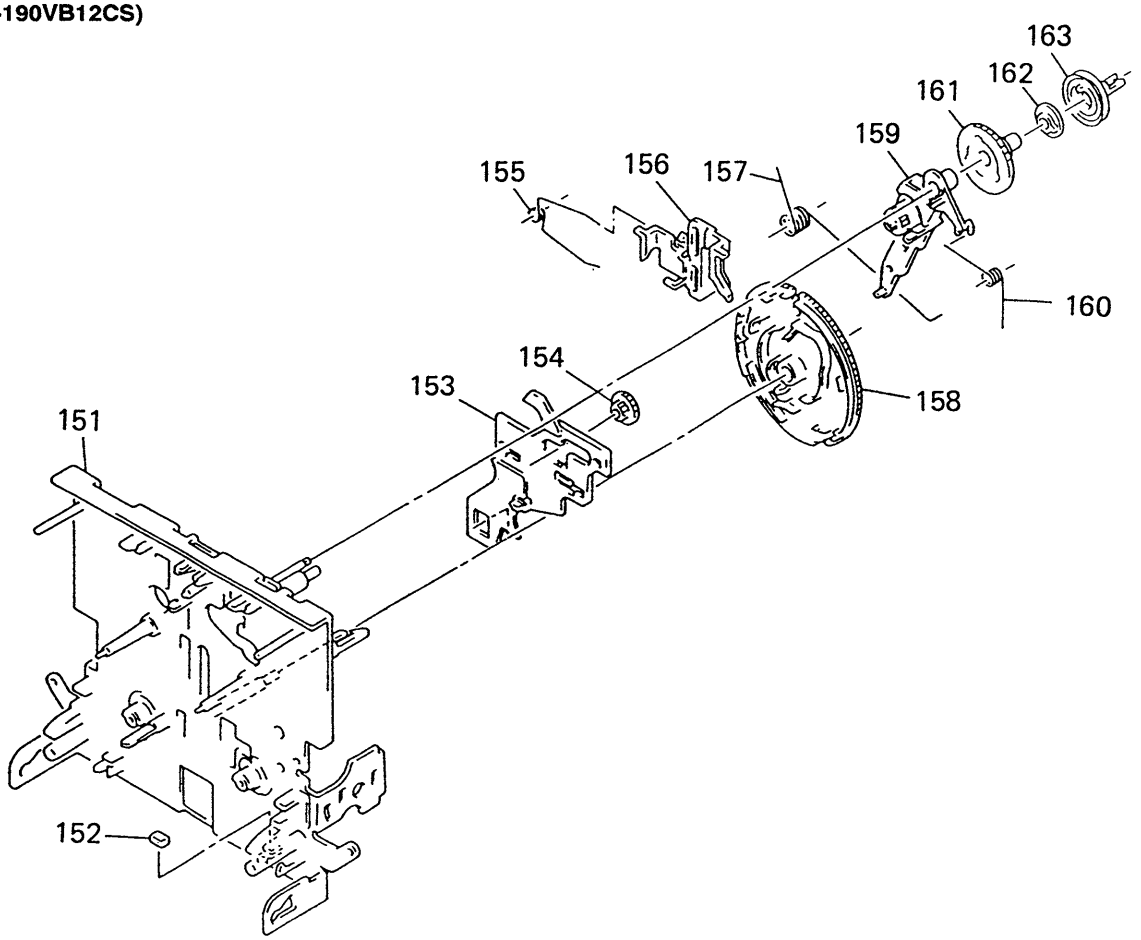

Ref. No.	Part No.	Description	Remark
151	X-3359-416-1	CHASSIS(ONE) ASSY, MECHANICAL	
152	3-359-469-01	SPACER	
* 153	3-359-415-01	SLIDER (TRIGGER SLIDER)	
154	3-359-448-01	GEAR (TRIGGER)	
155	3-359-454-01	SPRING, TORSION	
156	3-359-429-01	SLIDER (BRAKE PLATE)	
157	3-359-456-01	SPRING(TRIGGER SPRING), TORSION	

Ref. No.	Part No.	Description	Remark
158	3-359-420-01	GEAR (CAM GEAR)	
159	X-3359-405-1	LEVER (FR ARM) ASSY	
160	3-359-453-01	SPRING (FR ARM), TORSION	
161	3-359-419-01	GEAR (FR GEAR)	
162	3-359-421-01	CLUTCH (REEL DISK)	
163	3-359-418-01	PULLEY (FR PULLEY)	

SECTION 7
ELECTRICAL PARTS LIST

AUDIO

NOTE :
- Due to standardization, replacements in the parts list may be different from the parts specified in the diagrams or the components used on the set.
- -XX, -X mean standardized parts, so they may have some difference from the original one.
- RESISTORS
  All resistors are in ohms
  METAL : Metal-film resistor
  METAL OXIDE : Metal oxide-film resistor
  F : nonflammable
- Items marked " * "are not stocked since they are seldom required for routine service. Some delay should be anticipated when ordering these items.
- SEMICONDUCTORS
  In each case, u : μ , for example :
  uA.... : μ A.... , uPA.... : μ PA....
  uPB.... : μ PB.... , uPC.... : μ PC....
  uPD.... : μ PD....
- CAPACITORS
  uF : μ F
- COILS
  uH : μ H

The components identified by mark ⚠ or dotted line with mark ⚠ are critical for safety.
Replace only with part number specified.

When indicating parts by reference number, please include the board.

Ref. No.	Part No.	Description			Remark
*	A-2006-756-A	AUDIO BOARD, COMPLETE			
		**********************			
		< CAPACITOR >			
C11	1-163-133-00	CERAMIC CHIP	470PF	5%	50V
C12	1-136-157-00	FILM	0.022uF	5%	50V
C13	1-124-234-00	ELECT	22uF	20%	16V
C18	1-163-117-00	CERAMIC CHIP	100PF	5%	50V
C21	1-163-133-00	CERAMIC CHIP	470PF	5%	50V
C22	1-136-157-00	FILM	0.022uF	5%	50V
C23	1-124-234-00	ELECT	22uF	20%	16V
C28	1-163-117-00	CERAMIC CHIP	100PF	5%	50V
C31	1-124-234-00	ELECT	22uF	20%	16V
C32	1-124-234-00	ELECT	22uF	20%	16V
C33	1-124-234-00	ELECT	22uF	20%	16V
C51	1-164-182-11	CERAMIC CHIP	0.0033uF	10%	50V
C52	1-164-182-11	CERAMIC CHIP	0.0033uF	10%	50V
C53	1-163-020-00	CERAMIC CHIP	0.0082uF	10%	50V
C54	1-136-601-11	FILM	0.01uF	5%	630V
C56	1-164-505-11	CERAMIC CHIP	2.2uF		16V
C57	1-164-346-11	CERAMIC CHIP	1uF		16V
C71	1-164-346-11	CERAMIC CHIP	1uF		16V
C80	1-124-234-00	ELECT	22uF	20%	16V
C81	1-164-232-11	CERAMIC CHIP	0.01uF		50V
C82	1-136-157-00	FILM	0.022uF	5%	50V
C83	1-164-004-11	CERAMIC CHIP	0.1uF	10%	25V
C84	1-136-439-11	FILM	330PF	5%	630V
C85	1-136-433-11	FILM	100PF	5%	630V
C86	1-163-143-00	CERAMIC CHIP	0.0012uF	5%	50V
C87	1-136-273-91	FILM	75PF	5%	630V
C88	1-163-003-11	CERAMIC CHIP	330PF	10%	50V
C89	1-124-234-00	ELECT	22uF	20%	16V
C90	1-107-045-00	MICA	3.9PF		500V
C91	1-164-232-11	CERAMIC CHIP	0.01uF		50V
C92	1-136-157-00	FILM	0.022uF	5%	50V
C93	1-164-004-11	CERAMIC CHIP	0.1uF	10%	25V
C94	1-136-439-11	FILM	330PF	5%	630V
C95	1-136-433-11	FILM	100PF	5%	630V
C96	1-163-143-00	CERAMIC CHIP	0.0012uF	5%	50V
C97	1-136-273-91	FILM	75PF	5%	630V
C98	1-163-003-11	CERAMIC CHIP	330PF	10%	50V
C99	1-164-005-11	CERAMIC CHIP	0.47uF		25V
		< CONNECTOR >			
* CNP31	1-580-782-11	CONNECTOR, BOARD TO BOARD			
* CNP32	1-580-781-11	PIN, CONNECTOR (PC BOARD) 7P			
* CNP33	1-580-782-11	CONNECTOR, BOARD TO BOARD			
* CNP71	1-564-719-11	PIN, CONNECTOR (SMALL TYPE) 3P			
* CNP72	1-580-411-11	SOCKET, CONNECTOR 4P			
		< DIODE >			
D31	8-719-016-74	DIODE	1SS352		
		< IC >			
IC31	8-759-106-02	IC uPC4570G2			
IC81	8-759-106-56	IC uPC1297CA			
		< COIL >			
L81	1-410-780-11	INDUCTOR	27mH		
L91	1-410-780-11	INDUCTOR	27mH		
		< TRANSISTOR >			
Q51	8-729-808-01	TRANSISTOR	2SD1622-S		
Q52	8-729-808-01	TRANSISTOR	2SD1622-S		
Q53	8-729-808-01	TRANSISTOR	2SD1622-S		
Q71	8-729-216-22	TRANSISTOR	2SA1162		

AUDIO SW-A SYSTEM CONTROL

Ref. No.	Part No.	Description	Remark
		< RESISTOR >	
R11	1-216-107-00	METAL CHIP 270K 5% 1/10W	
R12	1-216-025-00	METAL CHIP 100 5% 1/10W	
R13	1-216-100-00	METAL GLAZE 130K 5% 1/10W	
R14	1-216-067-00	METAL CHIP 5.6K 5% 1/10W	
R21	1-216-107-00	METAL CHIP 270K 5% 1/10W	
R22	1-216-025-00	METAL CHIP 100 5% 1/10W	
R23	1-216-100-00	METAL GLAZE 130K 5% 1/10W	
R24	1-216-067-00	METAL CHIP 5.6K 5% 1/10W	
R31	1-216-033-00	METAL CHIP 220 5% 1/10W	
R32	1-216-033-00	METAL CHIP 220 5% 1/10W	
R51	1-216-091-00	METAL CHIP 56K 5% 1/10W	
R52	1-216-091-00	METAL CHIP 56K 5% 1/10W	
R53	1-216-073-00	METAL CHIP 10K 5% 1/10W	
R54	1-216-309-00	METAL CHIP 5.6 5% 1/10W	
R55	1-216-309-00	METAL CHIP 5.6 5% 1/10W	
R57	1-216-298-00	METAL CHIP 2.2 5% 1/10W	
R71	1-216-082-00	METAL GLAZE 24K 5% 1/10W	
R72	1-216-081-00	METAL CHIP 22K 5% 1/10W	
R73	1-216-089-00	METAL CHIP 47K 5% 1/10W	
R74	1-216-089-00	METAL CHIP 47K 5% 1/10W	
R81	1-216-073-00	METAL CHIP 10K 5% 1/10W	
R82	1-216-085-00	METAL CHIP 33K 5% 1/10W	
R83	1-216-001-00	METAL CHIP 10 5% 1/10W	
R84	1-216-101-00	METAL CHIP 150K 5% 1/10W	
R85	1-216-075-00	METAL CHIP 12K 5% 1/10W	
R91	1-216-073-00	METAL CHIP 10K 5% 1/10W	
R92	1-216-085-00	METAL CHIP 33K 5% 1/10W	
R93	1-216-001-00	METAL CHIP 10 5% 1/10W	
R94	1-216-101-00	METAL CHIP 150K 5% 1/10W	
R95	1-216-075-00	METAL CHIP 12K 5% 1/10W	
		< VARIABLE RESISTOR >	
RV11	1-241-627-11	RES, ADJ, CARBON 1K (PB LEVEL L)	
RV12	1-241-627-11	RES, ADJ, CARBON 1K (PB LEVEL R)	
RV71	1-241-630-11	RES, ADJ, CARBON 10K (TAPE SPEED)	
RV81	1-241-122-11	RES, ADJ, CARBON 22K (REC BIAS L)	
RV91	1-241-122-11	RES, ADJ, CARBON 22K (REC BIAS R)	
		< RELAY >	
RY31	1-515-913-11	RELAY	
		< TRANSFORMER >	
T51	1-433-383-11	TRANSFORMER, BIAS OSCILLATION	
T81	1-433-398-11	TRANSFORMER, BIAS OSCILLATOR	
T91	1-433-398-11	TRANSFORMER, BIAS OSCILLATOR	
		< TEST PIN >	
* TP81	1-568-449-11	HOUSING, CONNECTOR(PC BOARD)3P	

****

Ref. No.	Part No.	Description	Remark
*	1-634-841-14	SW-A BOARD **********	
	3-343-419-01	HOLDER (S SENSER A)	
		< CONNECTOR >	
* CNP81	1-568-852-11	SOCKET, CONNECTOR 9P	
		< IC >	
IC81	8-719-710-03	DIODE NJL5165K-B	
		< RESISTOR >	
R81	1-249-414-11	CARBON 560 5% 1/4W	
R83	1-247-834-11	CARBON 1.3K 5% 1/4W	
R84	1-249-417-11	CARBON 1K 5% 1/4W	
R85	1-249-408-11	CARBON 180 5% 1/4W	
		< SWITCH >	
S81	1-571-958-11	SWITCH, PUSH (1 KEY)(STOP)	
S82	1-571-281-21	SWITCH, LEAF (CRO2)	
S83	1-571-281-21	SWITCH, LEAF (METAL)	
S84	1-571-281-21	SWITCH, LEAF (REC)	
S86	1-571-281-21	SWITCH, LEAF (HALF)	

****

Ref. No.	Part No.	Description	Remark
*	A-2007-011-A	SYSTEM CONTROL BOARD, COMPLETE ******************************	(AEP, Germany)
*	A-2007-054-A	SYSTEM CONTROL BOARD, COMPLETE ******************************	(UK, AUS)
*	1-690-880-21	LEAD (WITH CONNECTOR)	
		< CAPACITOR >	
C101	1-136-157-00	FILM 0.022uF 5% 50V	
C102	1-124-907-11	ELECT 10uF 20% 50V	
C103	1-161-375-00	CERAMIC 0.0022uF 20% 50V	
C104	1-124-907-11	ELECT 10uF 20% 50V	
C105	1-130-475-00	MYLAR 0.0022uF 5% 50V	
C106	1-130-475-00	MYLAR 0.0022uF 5% 50V	
C107	1-136-174-00	FILM 0.56uF 5% 50V	
C108	1-136-171-00	FILM 0.33uF 5% 50V	
C109	1-124-907-11	ELECT 10uF 20% 50V	

Ref. No.	Part No.	Description			Remark
C110	1-124-907-11	ELECT	10uF	20%	50V
C111	1-123-382-00	ELECT	3.3uF	20%	100V
C112	1-124-902-00	ELECT	0.47uF	20%	50V
C113	1-124-903-11	ELECT	1uF	20%	50V
C131	1-124-927-11	ELECT	4.7uF	20%	100V
C132	1-124-925-11	ELECT	2.2uF	20%	100V
C201	1-136-157-00	FILM	0.022uF	5%	50V
C202	1-124-907-11	ELECT	10uF	20%	50V
C203	1-161-375-00	CERAMIC	0.0022uF	20%	50V
C204	1-124-907-11	ELECT	10uF	20%	50V
C205	1-130-475-00	MYLAR	0.0022uF	5%	50V
C206	1-130-475-00	MYLAR	0.0022uF	5%	50V
C207	1-136-174-00	FILM	0.56uF	5%	50V
C208	1-136-171-00	FILM	0.33uF	5%	50V
C209	1-124-907-11	ELECT	10uF	20%	50V
C210	1-124-907-11	ELECT	10uF	20%	50V
C211	1-123-382-00	ELECT	3.3uF	20%	100V
C212	1-124-902-00	ELECT	0.47uF	20%	50V
C213	1-124-903-11	ELECT	1uF	20%	50V
C231	1-124-927-11	ELECT	4.7uF	20%	100V
C232	1-124-925-11	ELECT	2.2uF	20%	100V
C501	1-124-360-00	ELECT	1000uF	20%	16V
C502	1-124-907-11	ELECT	10uF	20%	50V
C503	1-124-907-11	ELECT	10uF	20%	50V
C504	1-124-903-11	ELECT	1uF	20%	50V
C511	1-136-161-00	FILM	0.047uF	5%	50V
C512	1-136-164-00	FILM	0.082uF	5%	50V
C513	1-130-477-00	MYLAR	0.0033uF	5%	50V
C521	1-124-907-11	ELECT	10uF	20%	50V
C551	1-162-282-31	CERAMIC	100PF	10%	50V
C552	1-161-494-00	CERAMIC	0.022uF		25V
C553	1-162-217-31	CERAMIC	56PF	5%	50V
C554	1-124-925-11	ELECT	2.2uF	20%	100V
C555	1-124-925-11	ELECT	2.2uF	20%	100V
C571	1-124-916-11	ELECT	22uF	20%	63V
C572	1-126-916-11	ELECT	1000uF	20%	6.3V
C581	1-164-159-11	CERAMIC	0.1uF		50V
C601	1-164-159-11	CERAMIC	0.1uF		50V
C602	1-162-288-31	CERAMIC	330PF	10%	50V
C701	1-124-563-11	ELECT	2200uF	20%	25V
C702	1-124-563-11	ELECT	2200uF	20%	25V
C703	1-124-477-11	ELECT	47uF	20%	25V
C704	1-124-473-11	ELECT	1000uF	20%	10V
C705	1-124-473-11	ELECT	1000uF	20%	10V
C706	1-124-472-11	ELECT	470uF	20%	10V
C707	1-124-907-11	ELECT	10uF	20%	50V
C708	1-124-927-11	ELECT	4.7uF	20%	100V
C709	1-124-122-11	ELECT	100uF	20%	50V
C710	1-124-910-11	ELECT	47uF	20%	50V
C711	1-164-159-11	CERAMIC	0.1uF		50V
C712	1-136-169-00	FILM	0.22uF	5%	50V
C713	1-136-169-00	FILM	0.22uF	5%	50V
C801	1-124-927-11	ELECT	4.7uF	20%	100V
C803	1-164-159-11	CERAMIC	0.1uF		50V
C804	1-164-159-11	CERAMIC	0.1uF		50V
C805	1-164-159-11	CERAMIC	0.1uF		50V
C806	1-124-907-11	ELECT	10uF	20%	50V
C807	1-124-472-11	ELECT	470uF	20%	10V
C808	1-164-159-11	CERAMIC	0.1uF		50V
C809	1-164-159-11	CERAMIC	0.1uF		50V
C810	1-162-282-31	CERAMIC	100PF	10%	50V
C811	1-164-159-11	CERAMIC	0.1uF		50V
C812	1-164-159-11	CERAMIC	0.1uF		50V
C921	1-124-903-11	ELECT	1uF	20%	50V

< CONNECTOR >

Ref. No.	Part No.	Description
* CN501	1-691-916-11	CONNECTOR, BOARD TO BOARD
* CN502	1-691-916-11	CONNECTOR, BOARD TO BOARD
CN503	1-750-414-11	CONNECTOR, FFC/FPC 9P
CN504	1-750-418-11	CONNECTOR, FFC/FPC 13P
CN505	1-750-438-11	CONNECTOR, FFC/FPC 33P
CN506	1-506-468-11	PIN, CONNECTOR 3P
* CN701	1-564-510-11	PLUG, CONNECTOR 7P

< CONNECTOR >

Ref. No.	Part No.	Description
CNP504	1-750-418-11	CONNECTOR, FFC/FPC 13P
CNP505	1-750-438-11	CONNECTOR, FFC/FPC 33P
* CNP702	1-580-230-31	PIN, CONNECTOR (PC BOARD) 2P

< DIODE >

Ref. No.	Part No.	Description	
D131	8-719-987-63	DIODE	1N4148M
D132	8-719-987-63	DIODE	1N4148M
D231	8-719-987-63	DIODE	1N4148M
D232	8-719-987-63	DIODE	1N4148M
D511	8-719-987-63	DIODE	1N4148M
D512	8-719-987-63	DIODE	1N4148M
D551	8-719-987-63	DIODE	1N4148M
D571	8-719-200-77	DIODE	10E2N
D701	8-719-200-77	DIODE	10E2N
D702	8-719-200-77	DIODE	10E2N
D703	8-719-200-77	DIODE	10E2N
D704	8-719-200-77	DIODE	10E2N
D705	8-719-200-77	DIODE	10E2N
D706	8-719-200-77	DIODE	10E2N
D707	8-719-200-77	DIODE	10E2N
D708	8-719-933-33	DIODE	HZS6A1L
D709	8-719-933-47	DIODE	HZS7B2L
D710	8-719-933-41	DIODE	HZS6C3L

SYSTEM CONTROL

Ref. No.	Part No.	Description		Remark
D711	8-719-987-63	DIODE	1N4148M	
D712	8-719-987-63	DIODE	1N4148M	
D713	8-719-000-93	DIODE	UZL-7H1	
D714	8-719-987-63	DIODE	1N4148M	
D715	8-719-933-36	DIODE	HZS6B1L	
D801	8-719-933-33	DIODE	HZS6A1L	
D802	8-719-933-33	DIODE	HZS6A1L	
		< INDICATOR TUBE >		
FL901	1-517-173-11	INDICATOR TUBE, FLUORESCENT		
		< IC >		
IC501	8-752-059-55	IC	CXA1331S	
IC502	8-752-055-62	IC	CXA1579P	
IC503	8-759-634-51	IC	M5218AP	
IC504	8-759-634-51	IC	M5218AP	
IC505	8-759-634-51	IC	M5218AP	
IC506	8-759-140-53	IC	uPD4053BC	
IC507	8-759-634-51	IC	M5218AP	
IC508	8-759-000-48	IC	MC14052BCP	
IC509	8-759-916-14	IC	SN74HC04AN	
IC510	8-759-145-58	IC	uPC4558C	
IC601	8-759-803-42	IC	LA6500-FA	
IC701	8-759-145-58	IC	uPC4558C	
IC801	8-752-842-10	IC	CXP82316-014Q	
IC802	8-759-165-82	IC	PST600E-T	
IC901	8-741-100-48	IC	SBX1610-59	
		< JACK >		
J501	1-565-258-11	JACK, PIN 4P (LINE IN/OUT)		
J502	1-568-519-41	JACK, LARGE TYPE (HEADPHONES)		
		< COIL >		
L801	1-410-513-11	INDUCTOR	22uH	
		< FILTER >		
LPF101	1-231-388-00	FILTER, LOW PASS		
LPF201	1-231-388-00	FILTER, LOW PASS		
		< TRANSISTOR >		
Q101	8-729-900-89	TRANSISTOR	DTC144ES	
Q102	8-729-900-80	TRANSISTOR	DTC114ES	
Q121	8-729-142-25	TRANSISTOR	2SD1020-HFE	
Q122	8-729-620-05	TRANSISTOR	2SC2603-EF	
Q201	8-729-900-89	TRANSISTOR	DTC144ES	
Q202	8-729-900-80	TRANSISTOR	DTC114ES	
Q221	8-729-142-25	TRANSISTOR	2SD1020-HFE	
Q222	8-729-620-05	TRANSISTOR	2SC2603-EF	

Ref. No.	Part No.	Description				Remark
Q503	8-729-900-61	TRANSISTOR	DTA114ES			
Q504	8-729-900-80	TRANSISTOR	DTC114ES			
Q511	8-729-620-05	TRANSISTOR	2SC2603-EF			
Q512	8-729-900-80	TRANSISTOR	DTC114ES			
Q521	8-729-900-80	TRANSISTOR	DTC114ES			
Q531	8-729-900-61	TRANSISTOR	DTA114ES			
Q532	8-729-900-80	TRANSISTOR	DTC114ES			
Q551	8-729-119-76	TRANSISTOR	2SA1175-HFE			
Q571	8-729-900-61	TRANSISTOR	DTA114ES			
Q572	8-729-900-61	TRANSISTOR	DTA114ES			
Q573	8-729-900-65	TRANSISTOR	DTA144ES			
Q601	8-729-801-93	TRANSISTOR	2SD1387			
Q701	8-729-141-83	TRANSISTOR	2SB1094-LK			
Q702	8-729-209-15	TRANSISTOR	2SD2012			
Q703	8-729-900-74	TRANSISTOR	DTC143TS			
Q704	8-729-209-15	TRANSISTOR	2SD2012			
Q705	8-729-620-05	TRANSISTOR	2SC2603-EF			
Q706	8-729-900-74	TRANSISTOR	DTC143TS			
Q707	8-729-119-76	TRANSISTOR	2SA1175-HFE			
Q708	8-729-140-04	TRANSISTOR	2SB1116A-L			
Q803	8-729-900-80	TRANSISTOR	DTC114ES			
Q805	8-729-119-76	TRANSISTOR	2SA1175-HFE			
		< RESISTOR >				
R101	1-247-838-00	CARBON	2K	5%	1/4W	
R102	1-247-842-11	CARBON	3K	5%	1/4W	
R103	1-247-887-00	CARBON	220K	5%	1/4W	
R104	1-249-417-11	CARBON	1K	5%	1/4W	
R105	1-249-423-11	CARBON	3.3K	5%	1/4W	
R106	1-247-887-00	CARBON	220K	5%	1/4W	
R107	1-249-428-11	CARBON	8.2K	5%	1/4W	
R108	1-247-864-11	CARBON	24K	5%	1/4W	
R109	1-249-414-11	CARBON	560	5%	1/4W	
R110	1-249-429-11	CARBON	10K	5%	1/4W	
R111	1-249-423-11	CARBON	3.3K	5%	1/4W	
R121	1-249-437-11	CARBON	47K	5%	1/4W	
R122	1-249-421-11	CARBON	2.2K	5%	1/4W	
R123	1-249-421-11	CARBON	2.2K	5%	1/4W	
R124	1-249-437-11	CARBON	47K	5%	1/4W	
R125	1-249-425-11	CARBON	4.7K	5%	1/4W	
R131	1-249-425-11	CARBON	4.7K	5%	1/4W	
R132	1-247-822-11	CARBON	430	5%	1/4W	
R133	1-247-866-11	CARBON	30K	5%	1/4W	
R134	1-247-866-11	CARBON	30K	5%	1/4W	
R135	1-249-439-11	CARBON	68K	5%	1/4W	
R136	1-249-410-11	CARBON	270	5%	1/4W	
R141	1-249-432-11	CARBON	18K	5%	1/4W	
R142	1-249-432-11	CARBON	18K	5%	1/4W	
R143	1-249-421-11	CARBON	2.2K	5%	1/4W	

Ref. No.	Part No.	Description				Remark
R144	1-247-854-11	CARBON	9.1K	5%	1/4W	
R145	1-249-409-11	CARBON	220	5%	1/4W	
R151	1-249-433-11	CARBON	22K	5%	1/4W	
R152	1-249-417-11	CARBON	1K	5%	1/4W	
R161	1-249-429-11	CARBON	10K	5%	1/4W	
R201	1-247-838-00	CARBON	2K	5%	1/4W	
R202	1-247-842-11	CARBON	3K	5%	1/4W	
R203	1-247-887-00	CARBON	220K	5%	1/4W	
R204	1-249-417-11	CARBON	1K	5%	1/4W	
R205	1-249-423-11	CARBON	3.3K	5%	1/4W	
R206	1-247-887-00	CARBON	220K	5%	1/4W	
R207	1-249-428-11	CARBON	8.2K	5%	1/4W	
R208	1-247-864-11	CARBON	24K	5%	1/4W	
R209	1-249-414-11	CARBON	560	5%	1/4W	
R210	1-249-429-11	CARBON	10K	5%	1/4W	
R211	1-249-423-11	CARBON	3.3K	5%	1/4W	
R221	1-249-437-11	CARBON	47K	5%	1/4W	
R222	1-249-421-11	CARBON	2.2K	5%	1/4W	
R223	1-249-421-11	CARBON	2.2K	5%	1/4W	
R224	1-249-437-11	CARBON	47K	5%	1/4W	
R225	1-249-425-11	CARBON	4.7K	5%	1/4W	
R231	1-249-425-11	CARBON	4.7K	5%	1/4W	
R232	1-247-822-11	CARBON	430	5%	1/4W	
R233	1-247-866-11	CARBON	30K	5%	1/4W	
R234	1-247-866-11	CARBON	30K	5%	1/4W	
R235	1-249-439-11	CARBON	68K	5%	1/4W	
R236	1-249-410-11	CARBON	270	5%	1/4W	
R241	1-249-432-11	CARBON	18K	5%	1/4W	
R242	1-249-432-11	CARBON	18K	5%	1/4W	
R243	1-249-421-11	CARBON	2.2K	5%	1/4W	
R244	1-247-854-11	CARBON	9.1K	5%	1/4W	
R245	1-249-409-11	CARBON	220	5%	1/4W	
R251	1-249-433-11	CARBON	22K	5%	1/4W	
R252	1-249-417-11	CARBON	1K	5%	1/4W	
R261	1-249-429-11	CARBON	10K	5%	1/4W	
R501	1-249-417-11	CARBON	1K	5%	1/4W	
R502	1-215-455-00	METAL	27K	1%	1/6W	
R503	1-249-422-11	CARBON	2.7K	5%	1/4W	
R504	1-215-455-00	METAL	27K	1%	1/6W	
R505	1-249-417-11	CARBON	1K	5%	1/4W	
R511	1-249-429-11	CARBON	10K	5%	1/4W	
R512	1-249-421-11	CARBON	2.2K	5%	1/4W	
R513	1-249-441-11	CARBON	100K	5%	1/4W	
R514	1-249-441-11	CARBON	100K	5%	1/4W	
R515	1-249-436-11	CARBON	39K	5%	1/4W	
R516	1-249-425-11	CARBON	4.7K	5%	1/4W	
R517	1-249-433-11	CARBON	22K	5%	1/4W	
R518	1-249-425-11	CARBON	4.7K	5%	1/4W	
R521	1-249-426-11	CARBON	5.6K	5%	1/4W	

Ref. No.	Part No.	Description				Remark
R522	1-249-426-11	CARBON	5.6K	5%	1/4W	
R523	1-247-858-11	CARBON	13K	5%	1/4W	
R524	1-247-852-11	CARBON	7.5K	5%	1/4W	
R525	1-247-854-11	CARBON	9.1K	5%	1/4W	
R526	1-247-854-11	CARBON	9.1K	5%	1/4W	
R527	1-249-426-11	CARBON	5.6K	5%	1/4W	
R528	1-249-422-11	CARBON	2.7K	5%	1/4W	
R529	1-249-429-11	CARBON	10K	5%	1/4W	
R530	1-249-421-11	CARBON	2.2K	5%	1/4W	
R531	1-249-427-11	CARBON	6.8K	5%	1/4W	
R532	1-249-433-11	CARBON	22K	5%	1/4W	
R535	1-249-419-11	CARBON	1.5K	5%	1/4W	
R536	1-249-421-11	CARBON	2.2K	5%	1/4W	
R537	1-247-866-11	CARBON	30K	5%	1/4W	
R538	1-247-852-11	CARBON	7.5K	5%	1/4W	
R539	1-249-431-11	CARBON	15K	5%	1/4W	
R540	1-247-874-11	CARBON	62K	5%	1/4W	
R541	1-249-429-11	CARBON	10K	5%	1/4W	
R542	1-249-429-11	CARBON	10K	5%	1/4W	
R543	1-249-429-11	CARBON	10K	5%	1/4W	
R544	1-249-429-11	CARBON	10K	5%	1/4W	
R553	1-249-437-11	CARBON	47K	5%	1/4W	
R555	1-249-427-11	CARBON	6.8K	5%	1/4W	
R556	1-249-423-11	CARBON	3.3K	5%	1/4W	
R557	1-249-441-11	CARBON	100K	5%	1/4W	
R558	1-249-429-11	CARBON	10K	5%	1/4W	
R559	1-249-441-11	CARBON	100K	5%	1/4W	
R560	1-249-417-11	CARBON	1K	5%	1/4W	
R561	1-249-432-11	CARBON	18K	5%	1/4W	
R562	1-249-436-11	CARBON	39K	5%	1/4W	
R571	1-249-403-11	CARBON	68	5%	1/4W	
R572	1-249-429-11	CARBON	10K	5%	1/4W	
R573	1-249-429-11	CARBON	10K	5%	1/4W	
R574	1-249-435-11	CARBON	33K	5%	1/4W	
R601	1-249-421-11	CARBON	2.2K	5%	1/4W	
R602	1-249-429-11	CARBON	10K	5%	1/4W	
R603	1-249-405-11	CARBON	100	5%	1/4W	
R604	1-249-433-11	CARBON	22K	5%	1/4W	
R605	1-249-433-11	CARBON	22K	5%	1/4W	
R606	1-249-430-11	CARBON	12K	5%	1/4W	
R607	1-249-433-11	CARBON	22K	5%	1/4W	
R608	1-247-862-11	CARBON	20K	5%	1/4W	
R609	1-249-429-11	CARBON	10K	5%	1/4W	
R701	1-249-425-11	CARBON	4.7K	5%	1/4W	
R702	1-249-420-11	CARBON	1.8K	5%	1/4W	
R703	1-249-426-11	CARBON	5.6K	5%	1/4W	
R704	1-249-427-11	CARBON	6.8K	5%	1/4W	
R705	1-249-419-11	CARBON	1.5K	5%	1/4W	
R706	1-249-419-11	CARBON	1.5K	5%	1/4W	

SYSTEM CONTROL

Ref. No.	Part No.	Description				Remark
R707	1-249-429-11	CARBON	10K	5%	1/4W	
R708	1-249-425-11	CARBON	4.7K	5%	1/4W	
R709	1-249-409-11	CARBON	220	5%	1/4W	
R710	1-249-417-11	CARBON	1K	5%	1/4W	
R711	1-249-427-11	CARBON	6.8K	5%	1/4W	
R712	1-249-427-11	CARBON	6.8K	5%	1/4W	
R713	1-249-421-11	CARBON	2.2K	5%	1/4W	
R714	1-249-421-11	CARBON	2.2K	5%	1/4W	
R715	1-247-838-00	CARBON	2K	5%	1/4W	
R716	1-249-441-11	CARBON	100K	5%	1/4W	
R717	1-249-433-11	CARBON	22K	5%	1/4W	
R718	1-247-870-11	CARBON	43K	5%	1/4W	
R719	1-249-431-11	CARBON	15K	5%	1/4W	
⚠R720	1-219-137-11	FUSIBLE	0.33	10%	1/4W	F
R801	1-249-417-11	CARBON	1K	5%	1/4W	
R802	1-249-441-11	CARBON	100K	5%	1/4W	
R805	1-249-434-11	CARBON	27K	5%	1/4W	
R806	1-249-434-11	CARBON	27K	5%	1/4W	
R807	1-249-434-11	CARBON	27K	5%	1/4W	
R808	1-249-434-11	CARBON	27K	5%	1/4W	
R809	1-249-434-11	CARBON	27K	5%	1/4W	
R810	1-249-405-11	CARBON	100	5%	1/4W	
R811	1-249-405-11	CARBON	100	5%	1/4W	
R812	1-249-405-11	CARBON	100	5%	1/4W	
R813	1-249-405-11	CARBON	100	5%	1/4W	
R814	1-249-405-11	CARBON	100	5%	1/4W	
R815	1-249-405-11	CARBON	100	5%	1/4W	
R816	1-249-405-11	CARBON	100	5%	1/4W	
R817	1-249-435-11	CARBON	33K	5%	1/4W	
R818	1-249-435-11	CARBON	33K	5%	1/4W	
R819	1-249-435-11	CARBON	33K	5%	1/4W	
R820	1-249-405-11	CARBON	100	5%	1/4W	
R821	1-249-435-11	CARBON	33K	5%	1/4W	
R822	1-249-429-11	CARBON	10K	5%	1/4W	
R823	1-249-435-11	CARBON	33K	5%	1/4W	
R824	1-249-421-11	CARBON	2.2K	5%	1/4W	
R825	1-249-435-11	CARBON	33K	5%	1/4W	
R826	1-249-421-11	CARBON	2.2K	5%	1/4W	
R827	1-249-422-11	CARBON	2.7K	5%	1/4W	
R828	1-249-422-11	CARBON	2.7K	5%	1/4W	
R829	1-249-422-11	CARBON	2.7K	5%	1/4W	
R830	1-249-435-11	CARBON	33K	5%	1/4W	
R901	1-249-420-11	CARBON	1.8K	5%	1/4W	
R902	1-249-423-11	CARBON	3.3K	5%	1/4W	
R903	1-249-426-11	CARBON	5.6K	5%	1/4W	
R904	1-249-429-11	CARBON	10K	5%	1/4W	
R905	1-249-435-11	CARBON	33K	5%	1/4W	
R906	1-249-420-11	CARBON	1.8K	5%	1/4W	
R907	1-249-423-11	CARBON	3.3K	5%	1/4W	

Ref. No.	Part No.	Description				Remark
R908	1-249-426-11	CARBON	5.6K	5%	1/4W	
R909	1-249-429-11	CARBON	10K	5%	1/4W	
R910	1-249-435-11	CARBON	33K	5%	1/4W	
R911	1-249-429-11	CARBON	10K	5%	1/4W	
R912	1-249-429-11	CARBON	10K	5%	1/4W	
R913	1-249-429-11	CARBON	10K	5%	1/4W	
R914	1-249-441-11	CARBON	100K	5%	1/4W	
R921	1-247-850-11	CARBON	6.2K	5%	1/4W	
R922	1-247-862-11	CARBON	20K	5%	1/4W	
R923	1-249-428-11	CARBON	8.2K	5%	1/4W	
R924	1-249-425-11	CARBON	4.7K	5%	1/4W	
R925	1-249-437-11	CARBON	47K	5%	1/4W	
		< VARIABLE RESISTOR >				
RV111	1-238-600-11	RES, ADJ, CARBON 10K (REC GAIN L)				
RV211	1-238-600-11	RES, ADJ, CARBON 10K (REC GAIN R)				
RV901	1-241-820-11	RES, VAR, CARBON 50K/50K (REC LEVEL)				
RV902	1-241-897-11	RES, VAR, CARBON 50K/50K (REC BALANCE)				
		< SWITCH >				
S901	1-554-303-21	SWITCH, TACTILE (❙❙ /PAUSE)				
S902	1-554-303-21	SWITCH, TACTILE (▷)				
S905	1-554-303-21	SWITCH, TACTILE (◙ /REC MUTE)				
S906	1-554-303-21	SWITCH, TACTILE (RESET)				
S907	1-554-303-21	SWITCH, TACTILE (MEMORY)				
S908	1-554-303-21	SWITCH, TACTILE (■)				
S909	1-554-303-21	SWITCH, TACTILE (◁◁)				
S910	1-554-303-21	SWITCH, TACTILE (▷▷)				
S911	1-554-303-21	SWITCH, TACTILE (● /REC)				
S913	1-692-409-11	SWITCH, PUSH (1 KEY) (POWER)				
S921	1-554-303-21	SWITCH, TACTILE (AUTO CAL)				
S922	1-692-408-11	SWITCH, ROTARY (DOLBY NR)				
S923	1-554-118-00	SWITCH, PUSH (1 KEY) (MPX FILTER)				
		< TEST PIN >				
* TP801	1-564-505-11	PLUG, CONNECTOR 2P				
		< CRYSTAL >				
X801	1-579-175-11	VIBRATOR, CERAMIC				

****

MISCELLANEOUS
****

1	1-751-099-11	WIRE (FLAT TYPE) (13 CORE)
2	1-575-781-11	WIRE, FLAT TYPE (9 CORE)
3	1-751-100-11	WIRE (FLAT TYPE) (33 CORE)
⚠8	1-575-651-21	CORD, POWER (AEP, Germany)
⚠8	1-696-586-11	CORD, POWER (UK)

The components identified by mark ⚠ or dotted line with mark ⚠ are critical for safety.
Replace only with part number specified.

Ref. No.	Part No.	Description	Remark
⚠8	1-696-845-11	CORD, POWER (AUS)	
63	1-751-100-11	WIRE (FLAT TYPE) (33 CORE)	
67	1-575-781-11	WIRE, FLAT TYPE (9 CORE)	
72	1-751-099-11	WIRE (FLAT TYPE) (13 CORE)	
103	1-638-983-11	PC BOARD, MOTOR FLEXIBLE	
⚠HE101	1-543-673-11	HEAD, MAGNETIC (ERASE)	
* HRP101	1-543-919-11	HEAD, MAGNETIC (RECORD/PLAYBACK)	
M1	X-3365-377-1	MOTOR ASSY, CAPSTAN	
M2	X-3363-501-1	MOTOR ASSY, REEL	
⚠T701	1-423-634-11	TRANSFORMER, POWER	

****

ACCESSORIES & PACKING MATERIALS
****

	1-558-271-11	CORD, CONNECTION	
	1-558-271-11	CORD, CONNECTION	
	1-696-170-11	CORD, CONNECTION	
*	3-350-830-01	CUSHION	
*	3-388-323-71	INDIVIDUAL CARTON	
	3-756-690-11	MANUAL, INSTRUCTION (AEP, UK, AUS) (ENGLISH/FRENCH/SPANISH/PORTUGUESE)	
	3-756-690-41	MANUAL, INSTRUCTION (AEP) (GERMAN/DUTCH/SWEDISH/ITALIAN)	
	3-756-690-51	MANUAL, INSTRUCTION (GERMAN) (Germany)	
	3-756-690-61	MANUAL, INSTRUCTION (CHINESE) (AEP)	

****

****

HARDWARE LIST

****

#1	7-682-548-09	SCREW +BVTT 3X8 (S)
#2	7-682-547-09	SCREW +BVTT 3X6 (S)
#3	7-621-849-00	SCREW (BV/RING)
#4	7-685-134-19	SCREW (+ PTPWH) (2.6X8)
#5	7-621-773-95	SCREW +BVTT 2.6X6 (S)
#6	7-621-772-58	SCREW (+B2X10)
#7	7-627-556-08	SCREW +P 2.6X2.8
#8	7-621-775-00	SCREW +B 2.6X3

The components identified by mark ⚠ or dotted line with mark ⚠ are critical for safety. Replace only with part number specified.

9-957-824-11

Sony Corporation
Audio Group

English
93D0258-1
Printed in Japan
© 1993.4
Published by Audio Sector Quality Assurance Dept.